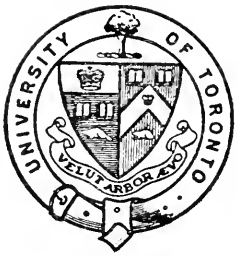

Presented to
The Library
of the
University of Toronto
by
THE ALEXANDER MACDONALD
FOUNDATION

HANDBOUND
AT THE
UNIVERSITY OF
TORONTO PRESS

Digitized by the Internet Archive
in 2010 with funding from
University of Toronto

http://www.archive.org/details/transactions17opht

LIBRARY CATALOGUE.

The following Additions have been made to the Library since October, 1896.

ALCALAI, Sasson. Ein Fall von Cysticercus des Auges, Gehirns, und Ruckenmarks. 1895

AMMON, Fredricus A. von. Monatsschrift für Medicin, Augenheilkund, und Chirurgie. Three vols. (all published). 1838—1840

ANONYMOUS. Ophthalmologia Pathologica, seu de cognoscendis et curandis oggani visorii affectionibus liber. 1800

AULIKE, Max. Sympathische Ophthalmie und Opticusresektion. 1895

AYRES, S. C. A Case of Chloroma. With additional Microscopical Examination and Photograph (Am. J. O.). 1897

BACKHAUSEN, Petrus. De Regeneratione Lentis Crystalli. Edited by Radius. 1830

BAERENS, B. Fr. Dissertatio Systematis Lentis crystallinæ. 1819

BARELLA, Wilhelm. Ueber einseitigen Exophthalmus bei Morbus Basedowii. 1894

BECKER, Otto. Photographische Abbildungen von Durchschnitten gesunder und kranken Augen. 1875

BENEDICT, Traugott Gustavus Guiliemus. De Morbis Oculi Humani Inflammatoriis. 1811

BERLIN. Zur sogenannten Commotio Retinæ (Z.). 1873

BICKERTON, Thos. H. Colour-blindness and Eyesight in the Mercantile Marine. 1896

BULL, G. J. Optométrie Subjective. Two papers. 1895–6

——— L'Asthenopie des Astigmates (S. Fr. d'Oph.). 1892

——— Un Optomètre (S. Fr. d'O.). 1887

——— Lunettes et Pince-nez (Étude médicale et pratique). 1889

——— Du Rapport de la Contraction irrégulière du Muscle ciliaire avec l'Astigmatisme (Ann. d'O.). 1892

——— Étude sur les Images de Diffusion (S. Fr. d'O.). 1896

CAMUSET, Georges. Angiome caverneux capsule de l'orbite. 1882

CHANDLER, George. A Treatise of a Cataract. Also Mr. Daviel's Comparative View of the respective merits of Couching and Extraction. 1775

CHELIUS, Maximilien Joseph. Traité pratique d'Ophtalmologie. French translation.—Vol. II. 1839

CLEMENS, Aloysius. Dissertatio sistens Tunica Corneæ et Humoris Aquei. 1816

CLOQUET, Jules. Mémoire sur la Membrane Pupillaire. 1818

COOPER, Samuel. Clinical Reflections on Cataract. 1805

DENEFFE. Les Oculistes Gallo-Romains au troisième siècle. 1896

DUANE, Alexander. A New Classification of the Motor Anomalies of the Eye. 1897

EDMONSTON, Arthur. A Treatise on the Varieties and Consequences of Ophthalmia. 1806

FRIEDLAENDER, Benno. Beitrag zur Casuistik der gonorrhoischen Conjunctival-Blennorrhöe. 1888

FUCHS, Ernst. Lehrbuch, 6th edit. 1897

GALEN. Die Augenheilkunde des Galenus. Inaug. Diss. by Katz. 1890

GALEZOWSKI. Étude sur la Migraine Ophtalmique.

GAMBORINI, Alexander. Observationes in nuperam Myopiæ ætiologiam dynamicam. Edited by Radius. 1830

GRAEFE, Alfred. Das Sehen der Schielenden. 1897

GUÉRIN. Traité sur les Maladies des Yeux. 1769

GUILLIÉ. Nouvelles Recherches sur la Cataracte et la Goutte Sereine. 1818

HAAB, O. Atlas und Grundriss der Ophthalmoscopie und ophthalmoscopischen Diagnostik. 2nd edit. 1897

Hairion. Parallèle entre l'Inoculation blennorrhagique et la Tonsure conjonctivale dans le traitement du Pannus. 1863

Helmholtz. Uebersicht über die gesammte physiologisch-optische Litteratur bis zum Schluss des Jahres 1894 (an Appendix to Physiologisch Optik).

Hesselbach, A. K. De Tunica Retina et Zonula Ciliari. 1820

Horn, Andrew. The Seat of Vision determined by the Discovery of a New Function in the Organ. 1813

Hosp, Christian. Dissertatio sistens Diagnosi et Cura Trichiasis, Distichiasis, nec non Entropii. Edited by Radius. 1826

Hull, Robert. Cursory Notes on the Morbid Eye. 1840

Hunter, James. On the Influence of Artificial Light in causing Impaired Vision. 1840

Jacobson, Isidor. Conjunctivæ Inflammatio Impetiginosa. Edited by Radius. 1830

Jaeger, Fridericus. Dissertatio de Keratonyxidis usu. 1812

Johnson, George Lindsay. Observations on the Macula Lutea (a continuation) (K.'s Arch. Amer.). 1896

Johnson, Lindsay. Observations on the Ophthalmoscopic Appearances in the Order Primates. 1897

Katz, Otto. Die Augenheilkunde des *Galenus*. 1890

Kersten, Fernand Leopold. De Dacrolithis seu Potius Rhinolithis. Edited by Radius. 1830

Knapp, Philip Coombs. Recurrent Oculo-motor Paralysis. A case with recurrent anæsthesia of fifth nerve. 1894

La Harpe. De Longitudine, Latitudine, et Directione Canalis Nasalis. Edited by Radius. 1830

Lawrence, W. Treatise on the Diseases of the Eye. 1833

Leber, T. H. Ueber Retinitis pigmentosa und angeborene Amaurose (A. f. O., xv). 1869

Leblanc, U. Traité des Maladies des Yeux observées dans les principaux Animaux Domestiques, principalement le Cheval. 1824

Leiblein, Valentine. Bemerkungen über des System der Krystallinse bei Säugethieren und Vogeln. Edited in Latin. 1821

Lutz, Georg. Beiträge zur Neurotomia optico-ciliaris. 1890

Maitre-Jan, MeAntoine. Traité des Maladies de l'Œil. 2nd edit. 1722

MARTINI, Mauritius Gustavus. De fili serici usu in quibusdam viarum morbis. 1822

MAUTHNER, Ludwig. Amblyopia diabetica. 1893

——— Ueber Exophthalmus. 1878

——— Zur Lehre von Embolie der Arteria centralis Retinæ (A. f. O.). 1873

MAYNARD, Surgeon-Captain F. Eucain in Ophthalmic Surgery. 1897

MIDDLEMORE, Richard. An Introductory Lecture on Diseases of the Eye (contains rather full references to the literature). 1839

MOLINARI, Josephus. De Scleronyxidis Sequelis earumque Cura. 1823

MOOREN, A. Die medicinische und operative Behandlung kurzsichtiger Störungen. 1897

NIEDEN, A. Ein Fall von Amaurose durch Carbol-Intoxication. 1882

——— Zwei seltenere Fälle von Orbital-Erkrankungen (Ivory Exostosis and Traumatic Enophthalmos). 1881

——— Vier Fälle von Coloboma vaginæ nervi optici (K.'s A. G., viii). 1879

NORRIS, W. F., and CHARLES OLIVER. System of Diseases of the Eye, by various Authors. Vol. I. 1897

OHLEMANN, M. Farbenblindheit und ihre Diagnose. 1897

OLIVER and NORRIS. System of Diseases of the Eye. 1897

OPHTHALMIC RECORD. Commencing with Vol. VI (1897), the first of "New Series."

PELLIER DE QUENGSY. Recueil de Mémoires et d'Observations sur l'Œil. 1783

——— Précis ou Cours d'Opérations sur la Chirurgie des Yeux. Two vols. 1789, 1790

PEPPMULLER, Fritz. Beitrag zur Frage nach dem Wert der Resektion des Opticus. 1895

PERCIVAL, Archibald. The Relation between the Length of Aphakic Eyes and their Correcting Glasses (K. A. Am.). 1897

POPE, T. H. Cataract in the Madras Presidency. A tabular statement of 500 cases. 1896

RADIUS, Julius. Scriptores Ophthalmologici Minores. Three vols. bound as one. 1826—1830
(A Latin edition of numerous pamphlets. These are catalogued separately.)

RICHTER, Henr. Christ. Ed. Tres Hemeralopiæ Congenitæ Casus. 1828

SAINT-YVES, De. Nouveau Traité des Maladies des Yeux. 1722

——— A Treatise on the Diseases of the Eyes. Translated from the French by *Stockton*. (Spelt on title-page "St. Ives.") 1748

SAWREY, S. An Account of a Newly-discovered Membrane in the Eye, and some Objections to the common operation for Fistula lacrymalis. 1807

SCHMIDT, Augustus Fridericus. De Trichiasis et Entropio. 1823

SCHOEN, Wilhelm. Die geschichtliche Entwicklung unserer Kenntniss der Staarkrankheit. 1897

SCHOPENHAUER. Ueber das Sehen und die Farben. 1815

SCHREIBER, Carlo. De Morbis Choroideæ. Edited by *Radius*. 1830

SCHWEINITZ, G. E. de. Unilateral Albuminuric Retinitis. 1896

——— Optic Nerve Atrophy from Toxic Agents.

——— Tobacco Amblyopia in a Woman. 1897

——— Pernicious Anæmia: Histological Examination of the Eyes (Tr. Amer. O. S.). 1896

——— Angioid Streaks in the Retina (Tr. Amer. O. S.). 1896

——— Subconjunctival Injections of Salt. 1896

——— Cases of Monocular Optic Neuritis. 1896

SERNY, J. B. A Treatise on Local Inflammation, more particularly Diseases of the Eye. 1809

STEPHENSON, Sydney. School Ophthalmia. 1897

STILLING, J. Grundzüge der Augenheilkunde. 1897

STIRLING, Alex. W. On certain Subjective Visual Sensations. 1896

STRATFORD, S. J. A Manual of the Anatomy, Physiology, and Diseases of the Eye. 1828

SWANZY. Sixth edit. 1897

System of Diseases of the Eye, by various Authors. Edited by *William F. Norris* and *Charles A. Oliver*. 1897

Thebesius. De Circulo Sanguinis in Corde (bound with *Hovius,* De Circulari Humorum in Oculis).

Tortual, Caspar Theobold De mentis circa visum efficacia. Edited by Radius. 1826

Varlez, L. J. Recherches sur les Causes de l'Ophtalmie dans l'Armée. 1829

Walther, Fridericus. De Fistulâ et Polypo Sacci Lacrymalis. 1822

Ware, James. Remarks on the Ophthalmy, Psorophthalmy, and Purulent Eyes of New-born Children. 5th edition. With Appendix on the Purulent Ophthalmy lately Epidemical in this Country. 2nd edition. 1814

——— Observations on the Treatment of the Epiphora or Watery Eye, and on the Fistyla Lacrymalis, &c. (posthumous). Edited by his son, Martin Ware. 1818

Watson, Alexander. Compendium of the Diseases of the Eye. 3rd edit. 1830

Wintersteiner, Hugo. Das Neuro-epithelioma Retinæ (Glioma). 1897

October, 1897.

OPHTHALMOLOGICAL TRANSACTIONS

VOL. XVII

TRANSACTIONS

OF THE

OPHTHALMOLOGICAL SOCIETY

OF THE

UNITED KINGDOM

VOL. XVII

SESSION 1896-7

LIBRARY.

With this volume of the 'Transactions' will be found a List of Additions to the Library Catalogue.

LONDON
J. & A. CHURCHILL
7, GREAT MARLBOROUGH STREET

1897

Ophth Soc . Library Catalogue

TRANSACTIONS

OF THE

OPHTHALMOLOGICAL SOCIETY

OF THE

UNITED KINGDOM

VOL. XVII

SESSION 1896-7

WITH

LIST OF OFFICERS, MEMBERS, ETC.

LONDON
J. & A. CHURCHILL
7, GREAT MARLBOROUGH STREET

1897

Ophth Soc ... Library Catalogue

LIBRARY
UNIVERSITY OF CALIFORNIA
892536

PRINTED BY ADLARD AND SON,
BARTHOLOMEW CLOSE, E.C., AND 20, HANOVER SQUARE, W.

IN EXCHANGE.

American Journal of Ophthalmology.
Annals of Ophthalmology and Otology, Chicago.
Annual of the Universal Medical Sciences.
Archiv für Ophthalmologie, Von Graefe.
Archives de Neurologie, Charcot.
Archives d'Ophtalmologie, Panas, Landolt et Gayet.
Archives of Ophthalmology, Knapp and Schweigger.
Bericht der ophthalmologischen Gesellschaft, Heidelberg.
Brain.
Bulletins de la Société Française d'Ophtalmologie.
Centralblatt für praktische Augenheilkunde, Hirschberg.
Klinische Monatsblätter für Augenheilkunde, Zehender.
Ophthalmic Hospital Reports.
Ophthalmic Record, Chicago.
Recueil d'Ophtalmologie.
Revue des Sciences Médicales.
Revue générale d'Ophtalmologie.
Transactions of the American Ophthalmological Society.

NOTICE.

The present volume comprises the proceedings of the Ophthalmological Society of the United Kingdom during its Seventeenth Session, October, 1896, to July, 1897.

The Society does not hold itself responsible for the statements, reasonings, or opinions expressed in the communications which the Council has deemed suitable for publication.

11, Chandos Street,
Cavendish Square, W.

TABLE OF CONTENTS

OF VOLUME XVII.

	PAGE
Officers and Council	IX
List of Presidents	X
List of Members	XI
Rules	XXIX
List of Communications made during the Session 1896–7	XXXIX
List of Plates	XLV
List of Diagrams and Illustrations in the Text	XLVII
Diseases of the Conjunctiva	1
Diseases of the Cornea	25
Diseases of the Iris and Ciliary Body	30
Diseases and Injuries of the Crystalline Lens	34
Diseases of the Retina, Choroid, and Vitreous	38
Diseases of the Optic Nerve	66
Intra-ocular Tumours	217
Parasitic Diseases	219
Diseases of the Orbit	233
Congenital Abnormalities	254
Miscellaneous	277
Appendix	338
Report of Council	339
Index	343

OFFICERS AND COUNCIL

OF THE

Ophthalmological Society of the United Kingdom

ELECTED AT

THE ANNUAL GENERAL MEETING, JULY 2ND, 1897.

President.

HENRY R. SWANZY.

Vice-Presidents.

JOHN COUPER.
G. A. BERRY, M.D. (Edinburgh).
SIR W. R. GOWERS, M.D., F.R.S.
D. ARGYLL ROBERTSON, M.D. (Edinburgh).
R. MARCUS GUNN.
R. WILLIAMS (Liverpool).
EDWARD NETTLESHIP.
JOHN ABERCROMBIE, M.D.
HENRY EALES (Birmingham).

Treasurer.

GEORGE COWELL.

Librarian.

W. ADAMS FROST.

Council.

T. H. BICKERTON (Liverpool).
E. F. DRAKE-BROCKMAN.
GUSTAVUS HARTRIDGE.
ARTHUR P. L. WELLS.
L. H. TOSSWILL (Exeter).
C. E. GLASCOTT, M.D. (Manchester).
ARTHUR W. SANDFORD, M.D. (Cork).
CHARLES J. OLDHAM (Brighton).
HOWARD H. TOOTH, M.D.
W. A. TURNER, M.D.
G. E. WHERRY, M.B. (Cambridge).
S. H. HABERSHON, M.D.

Secretaries.

JOHN BOWRING LAWFORD.
JAMES TAYLOR, M.D.

PRESIDENTS OF THE SOCIETY

(FROM ITS FORMATION).

ELECTED	
1880	SIR WILLIAM BOWMAN, Bart., LL.D., F.R.S.
1883	JONATHAN HUTCHINSON, F.R.S.
1886	JOHN WHITAKER HULKE, F.R.S.
1889	JOHN HUGHLINGS JACKSON, M.D., LL.D., F.R.S.
1890	HENRY POWER.
1893	D. ARGYLL ROBERTSON, M.D.
1895	EDWARD NETTLESHIP.
1897	HENRY R. SWANZY.

TRUSTEES FOR THE SOCIETY.

JOHN ABERCROMBIE, M.D.
W. A. BRAILEY.
R. MARCUS GUNN.
STEPHEN MACKENZIE, M.D.
EDWARD NETTLESHIP.
SEYMOUR J. SHARKEY, M.D.

TRUSTEES OF THE BOWMAN FUND.

C. E. FITZGERALD, M.D.
STEPHEN MACKENZIE, M.D.
EDWARD NETTLESHIP.

BOWMAN LECTURERS.

ELECTED	
1884	JONATHAN HUTCHINSON, F.R.S.
1885	J. HUGHLINGS JACKSON, M.D., F.R.S.
1886	PROF. ZEHENDER (Rostock).
1887	HENRY POWER.
1888	H. R. SWANZY.
1889	PROF. HANSEN GRUT (Copenhagen).
1890	J. W. HULKE, F.R.S.
1892	PROF. LEBER (Heidelberg).
1893	T. PRIDGIN TEALE, F.R.S.
1895	W. R GOWERS, M.D., F.R.S.
1896	PROF. SNELLEN (Utrecht).

*** *Members are requested to communicate with the Secretaries when corrections are necessary.*

LIST OF MEMBERS OF THE SOCIETY.

Honorary Members.

PROFESSOR STOKES, Cambridge.
PROFESSOR ZEHENDER, Munich.
PROFESSOR LEBER, Heidelberg.
PROFESSOR HANSEN GRUT, Copenhagen.
PROFESSOR SNELLEN, Utrecht.

EXPLANATION OF ABBREVIATIONS.

O.M.—Original Member.
Pres.—President.
V.-P.—Vice-President.
T.—Treasurer.
L.—Librarian.
S.—Secretary.
C.—Member of Council.
*.—Denotes Resident Life Members.
†.—Denotes Non-Resident Life Members.

GENERAL LIST OF MEMBERS.

ELECTED

O.M. *ABERCROMBIE, JOHN, M.D. (V.-P.), 23, Upper Wimpole Street, W. (S. 1882-5. C. 1885-8.)

1884 †ALLISON, H., M.D., care of Messrs. Binny and Co., Madras, India.

1887 *ANDERSON, TEMPEST, M.D., 17, Stone-gate, York.

1883 ANDREWS, A. G., Carlton House, Moss Lane East, Manchester.

O.M. ARCHER, T. BRITTIN, 29, Nottingham Place, W.

ELECTED

1891 †Armstrong, Hugh, Hobart, Tasmania.

1895 Attlee, John, M.B., 58, Brook Street, W.

O.M. Bankart, James, M.B., 19, Southernhay, Exeter. (V.-P. 1890-93.)

O.M. *Barlow, Thomas, M.D., 10, Wimpole Street, W. (C. 1880-81. V.-P. 1894-7.)

1889 †Barrett, James W., M.D., 34, Collins Street East, Melbourne, Australia.

1883 Barton, J. Kingston, 2, Courtfield Road, Gloucester Road, S.W.

1892 Bass, Frederick, 9, Upper Wimpole Street, W.

1892 Batten, Rayner D., M.D., Campden Lodge, Campden Hill Road, W.

1888 *Beaumont, W. M., 4, Gay Street, Bath.

O.M. *Beevor, C. E., M.D., 33, Harley Street, W. (S. 1891-4. C. 1894-7.)

1891 †Bennett, Alfred H., Kapunda, South Australia.

O.M. Benson, A. H., M.D., 42, Fitzwilliam Square, Dublin. (C. 1888-91.)

O.M. Berry, G. A., M.D. (V.-P.), 31, Drumsheugh Gardens, Edinburgh. (C. 1889-92.)

1881 Bickerton, T. H. (C.), 88, Rodney Street, Liverpool.

1892 Black, John Wilson, M.D.Edin., 46, Academy Street, Inverness.

1891 Black, J. Urquhart, M.B., 32, Weymouth Street, Portland Place, W.

1885 Blumer, W. P., Rydal House, Sunderland.

1890 Bokenham, T. J., 10, Devonshire Street, Portland Place, W.

1895 †Bonar, Thomson, M.D., 114, Via del Babuino, Piazza di Spagna, Rome.

1885 Bower, Ernest Dykes, Elton House, Gloucester.

1897 Bower, John A., M.B., Portland House, Cheltenham.

ELECTED

1893 Bowerman, Albert Claude, M.B., Yarwood House, Main Street West, Picton, Ontario, Canada.

O.M. Brailey, W. A., M.D., 11, Old Burlington Street, W. (S. 1883-6. C. 1880-3, 1886-9.)

1897 Breuer, August, M.D., 10, Finsbury Circus, E.C.

1891 Bristowe, Hubert Carpenter, M.D., Wrington, Somerset.

1886 Bronner, Adolph, M.D., 33, Manor Row, Bradford.

O.M. Browne, Edgar A., 39, Rodney Street, Liverpool. (C. 1887-90. V.-P. 1893-6.)

1895 Browne, J. W., M.D., 10, College Square North, Belfast.

1893 †Bull, G. J., M.D., 4, Rue de la Paix, Paris.

1889 Bullar, John F., M.B., 7, Carlton Crescent, Southampton.

1883 †Buller, Frank, M.D., 838, Dorchester Street, Montreal, Canada.

1897 Bulteel, Marcus Henry, 84, Durnford Street, Stonehouse, Plymouth.

O.M. †Burnham, G. H., M.B., 157, Simcoe Street, Toronto, Canada.

O.M. Buzzard, Thomas, M.D., 74, Grosvenor Street, W. (V.-P. 1888-91. C. 1881-2.)

1892 †Caiger, Herbert, M.B., Jacobsdal, Orange Free State.

1891 Campbell, E. Kenneth, M.B., 28, Wimpole Street, W.

1887 Cant, W. E., M.D., British Ophthalmic Hospital, Jerusalem, Palestine.

1882 *Cant, W. J., 3, Lindum Road, Lincoln.

1891 Cargill, L. Vernon, 15, Stratford Place, W.

1888 Carter, Rowland W., M.D., 13, Gloucester Row, Weymouth, Dorset.

1895 Cartwright, E. H., M.D., 64, Welbeck Street, W.

1888 Channer, O. H., M.B., Surgeon-Major; Belgaum, Bombay.

ELECTED

O.M. Charnley, William, M.D., Hardwick House, St. John's Hill, Shrewsbury. (C. 1896-7.)

1885 Chesshire, Arthur Edwin, 55, Darlington Street, Wolverhampton.

1897 Chetwood-Aiken, K. C., M.B., C.M., Royal London Ophthalmic Hospital.

1885 Clarke, Ernest, M.D., B.S., 3, Chandos Street, Cavendish Square, W. (C. 1893-6.)

1885 Collins, E. Treacher, 84, Wimpole Street, Cavendish Square, W. (C. 1889-92.)

1886 Collins, W. J., M.S., M.D., B.Sc., 1, Albert Terrace, Gloucester Gate, Regent's Park, N.W.

1894 †Coote, Patrick, M.D., 73, St. Ann Street, Quebec, Canada.

1884 Coulter, William, M.D., 2/2, Harrington Street, Calcutta.

O.M. Couper, John (V.-P.), 80, Grosvenor Street, W. (C. 1881-2.)

O.M. Coupland, Sidney, M.D., 16, Queen Anne Street, W. (C. 1885-8.)

1895 Courtenay, J. D., M.D., 256, Main Street East, Hamilton, Ontario.

O.M. Cowell, George (T.), 19, Harley Street, Cavendish Square, W. (V.-P. 1889-91. C. 1883-6.)

O.M. Critchett, G. Anderson, 21, Harley Street, W. (C. 1883-6. V.-P. 1894-7.)

1881 Cross, F. R., Worcester House, Clifton, Bristol. (C. 1891-4.)

O.M. Davidson, A. Deas, M.D., 9, Picton Place, Swansea. (C. 1895-6.)

1884 Davidson, James McKenzie, M.B., 76, Portland Place, W. (C. 1892-5.)

1889 †Davis, G. C., 3, Hyde Park Terrace, 173, Liverpool Street, Sydney, New South Wales.

ELECTED

O.M. Dent, Clinton Thomas, 61, Brook Street, W.

1881 Dixon, W. E., Bridge Cot, Oulton Broad, Lowestoft.

1889 Dodd, Henry Work, 136, Harley Street, W.

1882 †Dodge, Stephen, M.D., Halifax, Nova Scotia.

1890 Donaldson, Eben., 49, Great James Street, Londonderry.

1890 Douty, Edward Henry, M.B., B.C., 69, Bridge Street, Cambridge.

1887 Doyne, Robert W., 64, St. Giles', Oxford. (C. 1892-5.)

1881 *Drake-Brockman, E. F. (C.), 14, Welbeck Street, Cavendish Square, W.

1889 †Drake-Brockman, Herbert E., Mirzapur, India.

1895 Du Boulay, H. H., 2, Royal Terrace, Weymouth.

O.M. Duncanson, J. J. Kirk, M.D., 22, Drumsheugh Gardens, Edinburgh.

1886 Dunn, Hugh Percy, 54, Wimpole Street, Cavendish Square, W.

O.M. Eales, Henry (V.-P.), 7, Newhall Street, Birmingham. (C. 1890-3.)

O.M. *Edmunds, Walter, M.D., 75, Lambeth Palace Road, Albert Embankment, S.E. (C. 1885-8.)

1883 *Emrys-Jones, A., M.D., 10, St. John Street, Manchester.

1887 Ensor, Henry C., 23, Windsor Place, Cardiff.

1891 Eve, Frederic S., 125, Harley Street, W.

1891 †Evill, T. Claude, Broken Hill, New South Wales.

1896 Eyre, John W. H., M.D., 14, Trinity Square, S.E.

1888 Fergus, A. Freeland, M.B., 203, Bath Street, Glasgow.

1888 †Ferguson, Alex. F., M.D., care of Messrs. Grindlay, Groom & Co., Bombay.

O.M. †Ferguson, H. L., Dunedin, New Zealand.

1890 Ferguson, R. Bruce, M.D., B.C., 26, Woodland Road, New Southgate, N.

ELECTED

1889 Ferrier, David, M.D., F.R.S., 34, Cavendish Square, W. (C. 1896-7.)

1894 Fischer, E. C., M.B., Royal London Ophthalmic Hospital, Moorfields, E.C.

1895 Fisher, J. Herbert, M.B., 34, Queen Anne Street, Cavendish Square, W.

O.M. Fitzgerald, C. E., M.D., 27, Upper Merrion Street, Dublin. (V.P. 1882-5. C. 1880-1.)

O.M. Fitz-Gerald, W. A., M.D., Monte Carlo, Monaco.

1889 Flemming, Percy, 93, Gower Street, W.C.

1891 Foggin, George, 63, Westmoreland Road, Newcastle-on-Tyne.

1892 Folker, Herbert Henry, 11, Havelock Place, Stoke-on-Trent.

1886 Ford, A. Vernon, 14, High Street, Portsmouth.

1891 Forward, Francis E., Holberton Institution, St. John's, Antigua, W.I.

O.M. Frost, W. Adams (L.), 17, Queen Anne Street, Cavendish Square, W.

1883 †Da Gama, Jerminio Accacio, Khoja Moola, Bombay.

1895 Galloway, A. Rudolf, M.B., 207, Union Street, Aberdeen, N.B.

1887 †Gardner, John J., M.D., 12, Phillip's Place, Montreal, Canada.

1889 Gibbs, Alfred N. G., 52, Whiteladies Road, Clifton.

O.M. Glascott, C. E., M.D. (C.), 23, St. John Street, Manchester.

1885 †Godfray, Alfred Charles, St. Heliers House, St. Heliers, Jersey.

1897 Gordon, William, M.D., B.C., Barnfield Lodge, Exeter.

O.M. Gowers, Sir W. R., M.D., F.R.S. (V.-P.), 50, Queen Anne Street, W. (C. 1880-3.)

1897 Granger, F. M., 18, Nicholas Street, Chester.

ELECTED

1895 †Grant, H. Y., M.D., 414, Delaware Avenue, Buffalo, U.S.

1895 †Gray, James, M.D., 119, Robert Street, Toronto, Canada.

1887 Green, Edwin Collier, 27, Friar Gate, Derby.

O.M. Greenfield, W. S., M.D., 7, Heriot Row, Edinburgh.

1896 Grey-Edwards, Henry, M.D., Bank Place, Bangor, N. Wales.

1895 Griffin, W. Watson, M.B., 34, Regency Square, Brighton.

1885 *Griffith, A. Hill, M.D., 17, St. John Street, Manchester. (C. 1893-6.)

1890 Griffith, John, 7, Grafton Road, Acton, W.

1894 Grimsdale, Harold, M.B., 61, Wimpole Street, W.

O.M. Grossmann, K. A., 70, Rodney Street, Liverpool.

1889 Gunn, Donald S., 66, Wimpole Street, W.

O.M. Gunn, R. Marcus (V.-P.), 54, Queen Anne Street, W. (C. 1882-5, 1889-92. S. 1886-9.)

1887 Habershon, Samuel Herbert, M.D. (C.), 70, Brook Street, Grosvenor Square, W. (S. 1894-7.)

1889 Hailes, C. D. G., M.D., Hawkesdale, 27, Alma Road, Clifton.

1885 †Haines, Humphrey, Auckland, New Zealand.

1896 Hamilton, Robert J., 51a, Rodney Street, Liverpool.

1878 †Hamilton, T. K., M.D., Wakefield Street, Adelaide, South Australia.

1886 Hartley, Robert N., M.B., 38, Cookridge Street, Leeds.

1882 *Hartridge, Gustavus (C.), 12, Wimpole Street, W. (C. 1889-92. S. 1892-5.)

1892 Haydon, Frank, 55a, Welbeck Street, Cavendish Square, W.

1889 Helm, George F., M.D., Marazion, Cornwall.

1896 Henry, R. Wallace, M.D., 4, Market Street, Leicester.

1887 Hern, John, M.D., Semmercote, Darlington.

1883 Hewetson, H. B., 11, Hanover Square, Leeds.

ELECTED

1895 Hickman, H. R. Belcher, M.B., 122, Harley Street, W.

O.M. Higgens, Charles, 38, Brook Street, W. (C. 1880-3.)

1888 Hinnell, J. S., M.B., 62, Garland Street, Bury St. Edmunds.

1886 †Hodge, Rev. Sydney Rupert, c/o F. W. Gedge, Esq., Lee Wood, Weston-super-Mare.

1889 Holthouse, Edwin H., M.B., 40, Wimpole Street, W.

1893 †Howe, Lucien, 183, Delaware Avenue, Buffalo.

1884 †Hudson, Ernest, Central Gaol, Benares, N.W.P., India.

1889 †Hughes, Samuel H., Gingola, Mowbray Road, Willoughby, Sydney, New South Wales.

1893 Hughes, Wilfrid Kent, M.B., 102, Collins Street, Melbourne.

O.M. Hutchinson, Jonathan, F.R.S., 15, Cavendish Square, W. (*Pres.* 1883-6. V.-P. 1880-1, 1886-9.)

1883 †Jackson, James, M.D., Collins Street East, Melbourne, Australia.

O.M. Jackson, J. Hughlings, M.D., F.R.S., 3, Manchester Square, W. (*Pres.* 1889-90. V.-P. 1880-2, 1890-3.)

1888 James, J. T., M.D., 30, Harley Street, W.

O.M. Jeaffreson, C. S., 24, Eldon Square, Newcastle-on-Tyne.

1883 †Jenkins, E. J., M.D., Nepean Towers, Douglass Park, Sydney, N.S.W., Australia.

1883 Jessop, W. H. H., 73, Harley Street, W. (C. 1889-92.)

1882 Johnson, G. Lindsay, M.B., Cortina, Netherhall Gardens, South Hampstead.

1888 †Johnston, Geo. D., Georgia Street, Vancouver, British Columbia.

1896 Johnston, James, M.B., 2, White's Terrace, Bradford.

O.M. Jones, Evan, Ty-mawr, Aberdare, Glamorganshire.

O.M. Jones, H. Macnaughton, M.D., 141, Harley Street, W.

1897 Jones, Hugh E., 7, Rodney Street, Liverpool.

ELECTED

1894 †Jones, R. H., M.B., B.S., 209, Macquarie Street, Sydney, New South Wales.

O.M. Juler, H. E., 23, Cavendish Square, W. (C. 1886-9.)

1897 Kemp, Charles, M.B., C.M., 22, India Street, Edinburgh.

1888 †Kenny, Augustus Leo, M.B., 87, Collins Street, Melbourne, Victoria, Australia.

1890 Keogh, Alfred H., Surgeon-Major, M.D., M.Ch., Station Hospital, Barrackpore, Bengal, India.

1891 Kingdon, E. C., M.B., C.M., 4, Upper College Street, Nottingham.

1895 Knaggs, Robert Lawford, M.D., 27, Park Square, Leeds.

1881 †Knaggs, S. T., M.D., 16, College Street, Hyde Park, Sydney, New South Wales.

O.M. Lang, William, 22, Cavendish Square, W. (C. 1886-9.)

1881 Langdon, J. Winkley, 4, Winkley Square, Preston.

O.M. Lawford, J. B. (S.), 99, Harley Street, Cavendish Square, W. (C. 1886-9.)

1889 *Laws, Wm. G., M.B., 3, East Circus Street, Nottingham.

1895 Lawson, Arnold, M.D., 12, Harley Street, W.

O.M. Lawson, George, 12, Harley Street, Cavendish Square, W. (C. 1882-4. V.P. 1892-5.)

1895 †Lea, J. Augustus, M.B., Royal Colonial Institute, Northumberland Avenue, W.C.

1893 Leahy, Surg.-Major A. W. D., M.D., Indian Medical Service, 6, Elysium Row, Calcutta.

1885 †Le Cronier, Hardwick, St. Heliers, Jersey.

O.M. Lediard, H. A., M.D., 35, Lowther Street, Carlisle.

1885 Lee, Charles G., 73, Rodney Street, Liverpool.

1896 Lister, W. T., M.B., Rose Hill, Totteridge, Herts.

O.M. Little, David, M.D., 21, St. John Street, Manchester. (V.-P. 1888-91. C. 1880-1.)

1892 Lodge, Samuel, jun., M.D., 13, Manningham Lane, Bradford.

ELECTED

1883 Lunn, J. R., Resident Medical Officer, Marylebone Infirmary, Notting Hill, W. (C. 1892-5.)

1892 Macarthur, Robert F., M.B., 32, Weymouth Street, Portland Place, W.

1888 Mackay, George, M.D., 20, Drumsheugh Gardens, Edinburgh.

O.M. Mackenzie, F. M., 29, Hans Place, S.W.

1889 †Mackenzie, F. Wallace, M.B., 139, Upper Willis Street, Wellington, New Zealand.

O.M. Mackenzie, Stephen, M.D., 18, Cavendish Square, W. (S. 1880-2. C. 1882-5. V.-P. 1893-6.)

O.M. Mackinlay, J. G., 15, Stratford Place, W. (C. 1888-90.)

1889 MacLehose, Norman M., M.B., 13, Queen Anne Street, Cavendish Square, W.

1892 †MacLeod, Charles G., M.B., 26, College Street, Hyde Park, Sydney, N.S.W.

1881 †Maconachie, G. A., Brigade Surgeon Lieutenant-Colonel, M.D., 39, Queen's Road, Aberdeen.

1883 †Maher, W. O., M.D., 20, College Street, Hyde Park, Sydney, N.S.W.

1883 †Marlow, Frank William, M.D., 401, Montgomery Street, Syracuse, New York State, U.S.A.

1892 Marshall, Charles Devereux, 10, Devonshire Street, Portland Place, W.

1888 †Martin, Albert, M.D., Wellington, New Zealand.

1884 Maxwell, Patrick William, M.D., 19, Lower Baggot Street, Dublin.

1893 Maynard, Frederic Pinsent, Surgeon-Captain, M.B., Indian Medical Service, care of Grindlay and Co., Calcutta.

1890 McGillivray, Angus, M.B., 23, South Tay Street, Dundee, N.B.

O.M. McHardy, M. M., 5, Savile Row, W. (C. 1887-90.)

1895 †McIntosh, J. R., M.D., 44, King Square, St. John, New Brunswick, Canada.

ELECTED

1895 McKenzie, H. V., M.D., Elmbank, Abbey Road, Torquay.

1884 McKeown, David, M.D., 25, St. John Street, Manchester.

1884 McKeown, W. A., M.D., 20, College Square East, Belfast.

O.M. Meighan, T. S., M.D., 15, Elmbank Street, Glasgow.

1897 Miller, G. Victor, M.B., 2, Barrington Crescent, Stockton-on-Tees.

1881 †Milles, W. Jennings, care of Drs. Henderson and Macleod, Shanghai, China.

1897 Minnes, Robert Stanley, M.D., 122, Bagot Street, Kingston, Ontario, Canada.

1896 Mooney, Herbert C., M.B., 22, Lower Baggot Street, Dublin.

1887 Morgan, William Lewis, 37, Broad Street, Oxford.

O.M. Morton, A. Stanford, 133, Harley Street, W. (C. 1886-9.)

1891 Mossop, Arthur George, Newhaven, Sussex.

1890 Mowat, Daniel, M.D., St. Ninian's, 93, Stamford Hill, N.

O.M. Mules, P. H., M.D., The Hall, Whaley Bridge, Cheshire. (C. 1886-9.)

1891 Myddelton-Gavey, Edward Herbert, 124, Harley Street, W.

1893 Napier, F. H., M.B., B.S., 18, Brandon Place, Glasgow.

O.M. *Nelson, Joseph, M.D., 29, Wellington Place, Belfast. (C. 1893-5.)

O.M. *Nettleship, Edward (V.-P.), 5, Wimpole Street, W. (*Pres.* 1895-7. S. 1880-3. C. 1883-6. V.-P. 1886-9.)

1881 Nicholson, A., 30, Brunswick Square, Brighton.

1895 *Ogilvie, F. Menteith, M.B., 5, Evelyn Mansions, Victoria Street, S.W.

1895 Ogilvy, Alexander, M.B., Montrose House, Clifton.

ELECTED

1889 †O'Kinealy, Frederick, Indian Medical Service, 11, Elysium Row, Calcutta.

1884 Oldham, Charles J. (C.), 38, Brunswick Square, Brighton.

O.M. Ord, W. M., M.D., 37, Upper Brook Street, W. (T. 1886-91. V.-P. 1891-4.)

1881 Ormerod, J. A., M.D., 25, Upper Wimpole Street, W. (C. 1891-4.)

1892 †Orr, Andrew William, M.D., A. M. P. Buildings, Edward Street, Brisbane.

1890 †Osborne, A. B., M.D., 46, McNab Street South, Hamilton, Canada.

O.M. Owen, D. C. Lloyd, 51, Newhall Street, Birmingham. (V.-P. 1891-4.)

O.M. Page, Herbert W., 146, Harley Street, W. (C. 1890-3.)

1890 †Palmer, L. Loran, M.D., 42, St. George Street, Toronto, Ontario, Canada.

1894 *Parker, Herbert, 7, Bloomsbury Place, W.C.

1893 Part, J. Shepley, 20, Ashchurch Park Villas, Goldhawk Road, Ravenscourt Park, W.

1887 †Patell, D. H., 12, Ragoonatti Dadagi Street, Fort, Bombay.

1897 Pechell, Horace James, M.B., 12, Church Street, Merthyr Tydvil.

O.M. Penfold, Henry, 7, Brunswick Place, Brighton.

1891 Perry, A., Surgeon-Major, Royal Arsenal, Woolwich.

1889 †Perry, Francis F., Lahore Medical College, Punjab, India.

1888 Percival, Archibald Stanley, M.B., B.Ch., 16, Ellison Place, Newcastle-on-Tyne.

1889 Phillips, T., 124, Harley Street, W.

1895 Pickard, Ransom, M.D., 31, East Southernhay, Exeter.

1896 Pooley, G. H., Royal Westminster Ophthalmic Hospital.

ELECTED

1894 †Pope, R. J., M.D., Box 497, G.P.O., Sydney, N.S.W.

O.M. Power, Henry, 37A, Great Cumberland Place, W. (*Pres.* 1890-3. V.-P. 1882-5, 1893-6. C. 1880-2.)

1888 Price, John A. P., M.D., 124, Castle Street, Reading.

1882 Prichard, Arthur William, 6, Rodney Place, Clifton.

O.M. Prichard, Augustin, 4, Chesterfield Place, Clifton. (V.-P. 1881-4.)

1892 Pronger, Charles Ernest, East Parade, Harrogate.

O.M. Purves, W. Laidlaw, 20, Stratford Place, Oxford Street, W.

1888 Rainy, Adam R., M.B., 6, Upper Wimpole Street, W.

1889 Ramsay, A. Maitland, M.B., 15, Woodside Place, Glasgow.

1881 †Reeve, R. A., M.D., 22, Shuter Street, Toronto, Canada.

O.M. Reid, Thomas, M.D., 11, Elmbank Street, Glasgow. (V.-P. 1884-7.)

1885 Renton, James Crawford, M.D., 1, Woodside Terrace, Glasgow.

1891 Reynolds, Austin Edward, 81, Hornsey Rise, N.

1897 Richmond, R., M.D., Brook House, Great Bardfield, Essex.

1892 Ridley, Nicholas C., M.B., 27, Horse Fair Street, Leicester.

1897 Rivers, W. H. R., M.D., St. John's College, Cambridge.

1885 *Roberts, Edward, 12, St. John Street, Deansgate, Manchester.

1896 †Roberts, J. R., Surgeon-Captain, M.B., care of Messrs. King, King and Co., Bombay.

O.M. *Robertson, D. Argyll, M.D. (V.-P.), 18, Charlotte Square, Edinburgh. (*Pres.* 1893-95. V.-P. 1881-2, 1886-9. C. 1895.)

1891 Robertson-Fullarton, Archibald Louis, M.B., C.M., 201, Bath Street, Glasgow.

ELECTED

O.M. Rockliffe, W. C., M.D., 17, Charlotte Street, Hull. (C. 1892-5.)

1890 Rolston, John R., 14, The Crescent, Plymouth.

1891 Roper, Arthur Charles, The Shrubbery, Exeter.

1893 Ross, J. A., M.D., Box 208, Barrie, Ontario, Canada.

1882 †Roth, Reuter E., 42, College Street, Hyde Park, Sydney, New South Wales.

1893 Rowan, John, M.B., 7, Blythswood Square, Glasgow, N.B.

1881 †Rudall, J. T., 61, Spring Street, Melbourne, Australia.

1895 Russell, J. S. Risien, M.D., 4, Queen Anne Street, Cavendish Square, W.

1888 †Sanders, Richard C., M.D., 36, Chowringhee, Calcutta.

1884 *Sandford, Arthur W., M.D. (C.), 13, St. Patrick's Place, Cork.

1881 *Sansom, A. E., M.D., 84, Harley Street, W. (C. 1893-5.)

O.M. Savage, G. H., M.D., 3, Henrietta Street, Cavendish Square, W. (C. 1892-4.)

1891 Schorstein, Gustave, M.D., 11, Portland Place.

1888 Scott, Kenneth, Cairo, Egypt.

1892 Shannon, John Rowlands, M.D., 18, West 35th Street, New York.

O.M. Sharkey, S. J., M.D., 22, Harley Street, W. (S. 1885-8. C. 1888-91.)

1894 Shaw, Cecil E., M.D., 14, College Square East, Belfast.

1883 Shears, Charles H., 19, Upper Duke Street, Rodney Street, Liverpool.

1892 Sheppard, Arthur Murray, M.B., 2, Temple Gardens, E.C.

1883 Silcock, A. Q., 52, Harley Street, W. (S. 1889-92. C. 1892-5.)

1893 Simpson, R. J. S., M.B., care of Messrs. Holt and Co., Whitehall Place, S.W.

1891 Sinclair, Walter William, 16, Museum Street, Ipswich.

1889 Smith, John, M.D., Brycehall, Kirkcaldy, N.B.

ELECTED

O.M. Smith, Priestley, 34, Paradise Street, Birmingham. (V.-P. 1887-90. C. 1883-6.)

1881 Smith, T. Gilbart, M.D., 68, Harley Street, W.

O.M. Snell, Simeon, 17, Eyre Street, Sheffield. (C. 1884-7. V.-P. 1892-5.)

1889 Spencer, Matthew H., M.B., B.Ch., 4, Maxilla Gardens, North Kensington, W.

1889 Spicer, Wm. T. Holmes, M.B., 47, Welbeck Street, W.

1897 Square, James Elliot, 22, Portland Square, Plymouth.

1895 †Stamberg, A. C., M.B., 5, Windsor Terrace, St. Heliers, Jersey, Channel Islands.

1886 Stephenson, Sydney H. A., M.B., 33, Welbeck Street, W.

1896 Stevenson, Edgar, M.D., 67, Rodney Street, Liverpool.

1893 Stirling, Alexander Williamson, M.D., Atlanta, Georgia.

1887 †Stirling, J. W., M.B., 873, Dorchester Street, Montreal, Canada.

O.M. Story, J. B., 6, Merrion Square North, Dublin. (C. 1885-8. V.-P. 1894-7.)

O.M. †Sturge, W. A., M.D., 15, Rue Longchamp, Nice, Les Alpes Maritimes.

O.M. Swanzy, H. R. (*Pres.*), 23, Merrion Square North, Dublin. (V.-P. 1880-1, 1889-92.)

1888 Sym, William George, M.D., 50, Queen Street, Edinburgh.

1883 †Symons, Mark Johnston, M.D., North Terrace, Adelaide, South Australia.

1886 Sympson, E. Mansel, M.D., Deloraine Court, Lincoln.

O.M. Tay, Waren, 4, Finsbury Square, E.C. (C. 1880-2.)

1882 Taylor, C. Bell, M.D., Beechwood Hall, Mopperley Park, Notts.

1891 Taylor, James, M.D. (S.), 49, Welbeck Street, W. (C. 1894-7.)

1889 Taylor, S. J., M.B., 34, Prince of Wales' Road, Norwich.

ELECTED

O.M. Teale, T. Pridgin, F.R.S., 38, Cookridge Street, Leeds. (V.-P. 1880-1.)

O.M. Thomas, Jabez, Ty-Cerrig, Swansea.

1895 Thompson, Arthur Hugh, M.B., Lawn House, Hampstead.

1885 Thompson, C. Sinclair, The Quay, Bideford, Devon.

1895 Thompson, George W., M.B., 18, Chichell Road, Cricklewood, N.W.

1888 Thompson, John Tatham, M.B., 24, Windsor Place, Cardiff.

1895 Thompson, Robert, M.D., B.S., Dalkeith House, Wharf Street, Brisbane.

1883 †Tobin, William, 31, Hollis Street, Halifax, Nova Scotia, Canada.

1895 Toombs, Herbert George, St. Thomas's Hospital, S.E.

1883 Tooth, Howard H., M.D. (C.), 34, Harley Street, W.

O.M. Tosswill, L. H. (C.), 28, West Southernhay, Exeter.

1890 Turner, William Aldren, M.D. (C.), 13, Queen Anne Street, W.

O.M. Tweedy, John, 100, Harley Street, W. (C. 1884-7. V.-P. 1891-4.)

1883 Uhthoff, J. C., M.D., Wavertree House, Brunswick Place, Brighton.

1894 Usher, C. H., M.B., 3, Bon Accord Square, Aberdeen.

O.M. Vernon, Bowater J., 14, Clarges Street, Mayfair, W.

1887 Wainewright, Benjamin, M.B., 67, Grosvenor Street, W.

1888 Walker, Cyril H., M.B., 3, Leicester Villas, St. Paul's Road, Clifton.

O.M. Walker, G. E., 45, Rodney Street, Liverpool.

1892 Walker, H. Secker, 44a, Park Square, Leeds.

1893 Warner, F. Ashton, 10, Brechin Place, S.W.

1893 Warren, H. Guy S., 205, Macquarie Street, Sydney.

O.M. Watson, W. Spencer, 60, Queen Anne Street, Cavendish Square, W. (C. 1883-6.)

ELECTED

1893 †Weekes, Charles Jones, 36, College Street, Hyde Park, Sydney.

1887 Wells, Arthur P. L., M.B. (C.), 83, Harley Street, W.

1885 Werner, Louis, M.B., 31, Merrion Square North, Dublin.

O.M. West, Samuel, M.D., 15, Wimpole Street, W. (C. 1888-91.)

O.M. *Wherry, G. E., M.B. (C.), Corpus Buildings, Cambridge.

1892 White, G. B. Mower, M.B., 112, Harley Street, W.

1895 Whitehead, Arthur Longley, M.B., 4, Park Square, Leeds.

O.M. Williams, R. (V.-P.), 82, Rodney Street, Liverpool.

1894 Williams, W. E., M.B., Portmadoc, Carnarvonshire.

1889 Williamson, Geo. E., 8, Eldon Square, Newcastle-on-Tyne.

1888 †Willis, C. Fancourt, M.D., Quetta, Baluchistan, India.

1889 Wood, David J., M.B., Colonnade Chambers, 17, Shortmarket Street, Cape Town, South Africa.

1889 Woodburn, William Harrison, Kent Place, Ulverston.

O.M. Woodhead, G. Sims, M.D., Beverley, Nightingale Lane, Balham, S.W. (C. 1894-5.)

1890 *Wray, Chas., Bank Chambers, North End, Croydon.

1896 Yarr, M. T., Surgeon-Captain, 28, Devonshire Street, W.

RULES.

1. Object of the Society.—The object of the Society is the cultivation and promotion of Ophthalmology in the United Kingdom, India, and the Colonies.

2. Constitution.—The Society shall consist of Ordinary and Honorary members. All registered medical practitioners of the United Kingdom, and all legally qualified medical men in India and the colonies, whose qualifications are satisfactory to the Council of the Society, shall be eligible as ordinary members.

3. The officers of this Society shall consist of a President, four or more Vice-Presidents, a Treasurer, two Secretaries, a Librarian, and twelve other members, who together shall form the Council and manage the Society's affairs.

4. Ordinary Members.—Candidates shall be proposed on a form provided for the purpose and signed by three members from personal knowledge. The proposal paper shall be read at one Ordinary Meeting, and the Ballot shall be taken at the following meeting. No election shall take place unless ten members vote, and no person shall be elected who does not obtain four fifths of the votes given.

5. Form of Admission by the Chairman.—Members shall be admitted personally by the following form, after signing their names in the Admission Book, and paying their first annual Subscription. *Form of admission.*—"By the authority and in the name of the Ophthalmological Society of the United Kingdom, I admit you a member thereof."

6. Honorary Members.—The Council shall have the power of proposing for election as Honorary members men of distinguished eminence in Ophthalmology, or in the sciences

bearing upon it. They shall be elected by ballot in the same manner as Ordinary members at the next meeting. The Honorary members shall not exceed ten in number.

7. Resignation of Members.—Any member may retire from the Society after signifying his intention in writing to the Secretaries and paying any contribution due from him.

8. Re-admission of Members.—Any member who has retired from the Society and wishes to rejoin it, must be proposed, balloted for, and admitted in accordance with Rules 4 and 5.

9. Expulsion of Members.—A member can be expelled only at a General Meeting especially called for that purpose, and of which a written notice shall have been sent to every member at least fourteen days previously. At least ten votes must be recorded, and four fifths shall carry the expulsion.

10. Subscriptions.—The Annual Subscription shall be One Guinea, payable in advance in the month of October. Each member on election shall pay an Entrance Fee of One Guinea in addition to the Subscription, but in the case of a member elected at a meeting of the Session subsequent to Easter he shall not be required to pay a Subscription during the next Session.

11. Arrears.—Any member whose Subscription is six months in arrear shall be reminded of the same by one of the Secretaries, and if it be not paid within the current year he shall cease to be a member.

12. Composition Fee for Resident Members. — Any member may on entrance pay a Composition Fee of Fifteen Guineas, and be thereby exempted from paying any further Subscriptions, such member enjoying all the same rights and privileges as if he were a Subscribing member. After entrance, the Composition Fee will be according to the following scale:— After less than five payments Fourteen Guineas, after five payments Thirteen Guineas, after ten payments Twelve Guineas, after fifteen payments Eleven Guineas, after twenty payments Ten Guineas, after twenty-five payments Eight and a Half Guineas, after thirty payments Seven Guineas, after thirty-five payments Five Guineas, after forty payments Two and a Half Guineas, and after forty-five payments *nil*.

13. Composition Fees for Non-Resident Members.—Any

member resident out of the United Kingdom may pay a Composition Fee of Seven Guineas instead of the Annual Subscription, and will then be entitled to receive, post free, a copy of the Society's 'Transactions' each year, and to have his name printed in the list of members; but if at any time he subsequently become a Resident member of the Society, he shall resume the payment of his Annual Subscription at the end of six years from the date of his election, or if more than six years have elapsed, from the date of his return to residence. The question of further composition by him shall be decided by the Council. N.B.—The Composition Fee will be held to include the Entrance Fee if paid any time during the First Session.

14. Election of Officers.—The Officers of the Society shall be elected yearly by Ballot at the Annual Meeting. A Balloting list of the names recommended by the Council for election shall be sent to each Resident member, together with the notice of the Annual Meeting. In the event of any name being substituted for any recommendation of the Council, the election shall not be valid unless effected by a majority of those present at the meeting. The President shall not hold office for a period of more than two consecutive years. No other member of the Council, except the Treasurer and the Librarian for the time being, shall hold the same office for more than three consecutive years. Any ordinary member of Council who has been absent from all the meetings of the Council for one session shall not be eligible for election to the Council for the ensuing session.

15. Scrutineers.—Two Scrutineers appointed by the President at the commencement of the Annual Meeting shall receive the lists during the first hour, and report the result to the President, who shall have a casting vote.

16. President and Vice-Presidents.—The President shall regulate all the proceedings of the Society and Council, state and put questions, interpret the application of the laws, and decide any doubtful points. He shall check irregularities and enforce the observance of the laws. He shall sign the minutes of General and Council Meetings. In the absence of the President one of the Vice-Presidents, the Treasurer, or some other member chosen by the meeting, shall perform his duties.

17. Secretaries.—The Secretaries shall manage all correspondence, shall attend every meeting of the Society and Council, and take minutes, which shall be read at the following meeting. They shall notify to new members their election. They shall arrange with the President the order of proceedings at all the meetings. They shall have charge of and keep a register of all papers communicated, and shall be the Editors of the 'Transactions.'

18. Treasurer.—The Treasurer shall receive all moneys due to the Society, and make all payments ordered by the Council, keeping an account of all such receipts and payments. He shall keep a printed receipt book for the subscriptions, and every receipt shall be signed by himself and countersigned by one of the Secretaries. He shall present to the Annual Meeting a written Report of the financial state of the Society, signed by himself and by two members of the Audit Committee.

19. Librarian.—The Librarian shall have entire charge and control of the Library. He shall purchase books for the Library as opportunities arise at his discretion out of the grant previously voted for this purpose by the Council. He shall see that all books belonging to the Society are duly entered in the Catalogue, and that the periodicals and pamphlets are from time to time, as occasion may require, suitably bound. It will be his duty to see that the Library Rules are not infringed.

20. Audit Committee.—The President, one of the Secretaries and two members of the Society nominated by the President at some meeting of the Society previous to the Annual Meeting, shall form a Committee to audit the Treasurer's accounts.

21. Meetings of Council.—The Council shall meet immediately after the meetings in October, January, May, and June, and at such other times as they may be specially convened. Three shall form a quorum. The Council shall determine questions by show of hands (or by Ballot if demanded), the President having in both cases a casting vote in addition to his ordinary vote. The Council shall decide upon all questions relating to the reception of communications, and to their publication in the Society's 'Transactions.'

22. Vacancies of Officers.—The Council shall have the power of filling up any vacancies which may occur in any of

the offices of the Society between one Annual Meeting and another.

23. 'Transactions.'—A copy of the 'Transactions' shall be sent to each Ordinary member of the Society whose subscription is not in arrear, and a copy of the 'Transactions' shall be sent to each Honorary member of the Society.

24. Meetings.—These shall consist of Ordinary, Clinical, Special, and General Meetings.

Ordinary Meetings.—The business during the first half-hour shall consist of the discussion of cases and card specimens, after which papers shall be read and discussed. Nothing relating to the laws or management of the Society shall be considered.

Clinical Meetings.—One or more of the meetings in each session may be devoted exclusively to the exhibition and discussion of cases and specimens. The number and dates of such meetings shall be arranged by the President and Secretaries.

The bye-laws and regulations relating to Ordinary and Clinical Meetings will be found on page xxxvii.

Special Meetings.—At the discretion of the Council an extra meeting may be arranged in order to hold a discussion upon some subject, of which due notice shall be given, or one of the Ordinary Meetings of the Society may be devoted to this purpose.

General Meetings.—The Annual General Meeting, of which every resident member shall receive one week's notice, shall be convened by special summons; ten shall form a quorum. It shall be held immediately after the Ordinary Meeting in July. The business shall consist in the election of Officers, the presentation and adoption of the Annual Report, and the discussion of any proposed alteration of the Rules, notice of which shall be given in the summons convening the meeting. No alteration in the Rules shall be adopted unless four fifths of the votes are given in its favour.

A Special General Meeting may be called at any time, on one week's notice, by the President or any three members of the Council, or on the requisition of fifteen members of the Society. The nature of the business to be transacted at such meetings

shall be specified in the summons sent to each member of the Society, and no other business shall be considered.

Dates and Hours of Meetings.—The dates of meetings shall be, unless otherwise determined by the Council, the third Thursday in October, the second Thursday in November and December, the last Thursday in January, the second Thursday in March, the first Thursday in May, the second Thursday in June, and the Friday after the first Thursday in July. All but the General and Special Meetings shall commence at 8.30, and shall not be prolonged after 10 p.m , except on the proposal of a member, duly seconded, and carried by a show of hands. The hour of all other meetings shall be determined by the President and Secretaries.

25. Visitors.—Each member may introduce as visitors two members of the medical profession to all but the General Meetings. They shall sign their names in the attendance book, opposite to the name of the member introducing them.

26. Order of Communications.—Communications shall be taken in the order in which they have been sent in to the Secretaries, subject to the discretion of the President. If an author be not present when the time arrives for his communication to be read, it shall be dealt with as the President may direct.

27. Publication of Papers and Discussion.—All papers must be sent to the Secretaries at least one week before the meeting, together with an abstract suitable for immediate publication in the journals. When possible, notice should be given relating to card cases, &c. All papers read before the Society shall be deemed the exclusive property of the Society, and if published elsewhere by the author without the express permission of the Council shall thereby be disqualified for admission into the Society's 'Transactions.' No report of the meetings of the Society may be published by members or others without the sanction of the Council.

28. Committee of Reference.—Six members of the Society shall be chosen annually by the Council to act with the Secretaries as a Committee of Reference, and any communication to the Society may be referred by the Secretaries to two or more members of such Committee of Reference, for the

purpose of considering the fitness of the communication in question to be read before the Society, or to be published in the Society's 'Transactions.'

LIBRARY RULES.

1. The Library shall be open at the same hours as that of the Medical Society, viz. from 1 p.m. to 6 p.m. daily, except on Saturdays, when it will be closed at 3 p.m..

2. Members will be entitled to read the books belonging to the Society at 11, Chandos Street, between those hours, or to take them out on signing a book provided for that purpose. But any books of extraordinary value may be placed by the Council on a separate list, such books not being allowed to be removed from the Library.

3. A large number of the current periodicals will be accessible to members in the Library. These will not be allowed to be taken out of the Library.

4. A book must be returned at the expiration of a fortnight if wanted by any other member. The Librarian will in such a case write to the member in whose name the book was taken out.

5. If the book be not returned within four days of such notice a fine of 6d. will be charged for each day that the book is retained beyond such days of grace.

6. Instruments and drawings cannot be taken out of the Library except with the express permission of the Council.

7. A member taking out a book will be held responsible for its being returned in good condition.

THE BOWMAN LECTURE.

Resolution of Council, September 18th, 1883.

"That in recognition of Mr. Bowman's distinguished scientific position in ophthalmology and other branches of Medicine, and

in commemoration of his valuable services to the Ophthalmological Society, of which he was the first President, the Council shall each year, or periodically, nominate some person to deliver a lecture before the Society, to be called 'The Bowman Lecture,' which shall consist of a critical *résumé* of recent advances in ophthalmology or in such subject or subjects as the Council shall select, or of any original investigation, and shall be delivered at a special meeting of the Society held for the purpose, at which no other business shall be transacted."

BYE-LAWS CONCERNING COMMUNICATIONS.

1. The 'Transactions' shall consist of such communications, made to the Society by or through members, as may be deemed by the Council suitable for publication. Also of discussions of importance or interest arising out of such communications.

2. No communication to the Society shall occupy more than twenty minutes, and in the subsequent discussion of it no member shall speak more than once, or for more than ten minutes, without the special permission of the Chairman.

3. All communications accepted by the Society become the property of the Society.

4. Communications are admissible which may have been read elsewhere, provided they have not been published, and are not intended to be published, in whole or in abstract, through another channel.

5. The cost of illustrations must be borne by the authors, unless otherwise specially decided by the Council.

6. Reprints of papers may be obtained by authors at their own expense, by arrangement with the printer.

REGULATIONS CONCERNING THE EXHIBITION OF PATIENTS AND OF PATHOLOGICAL SPECIMENS BY CARD.

A. Patients must attend not later than 8 p.m., and will be allowed to leave at 9.30. A card, provided by the Society, must be placed conveniently near the patient (unless it is undesirable that it should be read by the patient or friends), and on it must be clearly written an account of the case, *comprising all the particulars intended for publication.* The title only of the case will be announced by the President to the meeting, but the Exhibitor (or his representative) must be present at the meeting, and be willing to read the case and furnish additional details if called upon to do so; the length of such oral communications not to exceed five minutes.

The narration and discussion of Card Specimens shall not occupy more than the first half-hour of the meeting.

B. Pathological Specimens may, at the discretion of the Exhibitor, be shown by card, and will then be subject to the above regulations. It is particularly to be noted that the description on the card must *comprise all the particulars intended for publication.*

REGULATIONS FOR CLINICAL EVENINGS.

1. Notice of cases or specimens should be sent in to the Surgical Secretary as early as possible, but not later than the Thursday preceding the meeting.

2. Cases and specimens may be shown without previous notice if there is time, but not until all on the printed list have been disposed of.

3. The number of cases to be shown by any member, and the total number on one evening, to be left to the discretion of the President and Secretaries.

4. A list of the cases and specimens to be sent before the meeting to every member in the kingdom.

5. Particulars of each case to be fully written out before the meeting, and given to the Secretaries at the close of the meeting.

6. A short abstract of the case to be written on the card provided for the purpose, and placed by the patient.

7. The narration of a case shall not occupy more than five minutes, and in the subsequent discussion no member shall speak more than once or for more than five minutes.

8. Patients and specimens to be in place and ready by 8 p.m., one of the Secretaries being in attendance.

9. Unless it be thought undesirable, each patient shall be brought into the meeting room during the narration of the case.

10. If the exhibitor or his representative be not present the case cannot be taken.

11. A case which has been shown at one of the Ordinary Meetings may be subsequently brought forward at a Clinical Evening.

LIST OF COMMUNICATIONS

BROUGHT BEFORE THE SOCIETY DURING THE SESSION 1896-97.

PAGE

I. DISEASES OF THE CONJUNCTIVA.

1. Pemphigus or essential shrinking of the conjunctiva. By A. Quarry Silcock 1
2. Tuberculosis of the conjunctiva. (With Plate I.) By J. W. H. Eyre, M.D. 8

II. DISEASES OF THE CORNEA.

1. Note on the application of oxygen to suppurative conditions of the cornea. By Arthur Sandford, M.D. 25
2. Ulcer of cornea with extensive purulent infiltration; treatment with oxygen only: recovery. By E. Treacher Collins and George Stoker 27
3. Results of operations for conical cornea. By R. W. Doyne 29

III. DISEASES OF THE IRIS AND CILIARY BODY.

PAGE

1. Sarcoma of the iris. By C. Devereux Marshall 30
2. Tubercular disease of iris and ciliary body. By W. T. Holmes Spicer and C. Devereux Marshall 31

IV. DISEASES AND INJURIES OF THE CRYSTALLINE LENS.

Spontaneous dislocation of lens in its capsule into the anterior chamber. By Thomas H. Bickerton 34

V. DISEASES OF THE RETINA, CHOROID, AND VITREOUS.

1. A case of spontaneous recovery of a retinal detachment. By R. Lawford Knaggs 38
2. Detachment of retina; choroidal atrophy. (With Plate II, fig. 2.) By A. Quarry Silcock 45
3. Specimens of Y-shaped detachment of the retina. By Ernest Clarke 47
4. Two brothers with symmetrical disease of the macula, commencing at the age of fourteen. By Rayner D. Batten 48
5. Case of retinal pigmentation. (With Plate II, fig. 1) By Henry Juler 50
6. A case of so-called "retinitis punctata albescens." By John Griffith 51

PAGE

7. Case of retinal œdema with sudden failure of lower half of left visual field. By Henry Juler 53
8. Embolism of lower division of central artery of retina. By J. B. Lawford 55
9. Bilateral spontaneous hæmorrhage (?) into the vitreous. By R. D. Batten 58
10. Peculiar macular changes. By Henry Juler 60
11. A case of superficial choroido-retinitis of peculiar form and doubtful causation. By E. H. Holthouse and R. D. Batten 62
12. Disseminated white patches in the choroid, with cholesterine crystals on the surface. By E. Treacher Collins 63
13. A case of ? new growth in the macular region. By C. H. Walker 64

VI. DISEASES OF THE OPTIC NERVE.

1. Hereditary or congenital optic atrophy and allied cases. By Simeon Snell 66
2. A series of cases of optic atrophy following injury, chiefly of the anterior part, of the head. By Simeon Snell 81
3. Discussion on retro-ocular neuritis, March 11th and 24th, 1897. Opened by Mr. Marcus Gunn and Dr. Buzzard 107

VII. INTRA-OCULAR TUMOURS.

Sarcoma of choroid. By W. H. H. Jessop 218

VIII. PARASITIC DISEASES.

PAGE

1. Some cases of intra-ocular cysticercus, and one case of intra-ocular hydatid. (With Plate III.)
By A. Hill Griffith, M.D. 220
2. Note on the further history of the case of filaria loa previously reported to the Society.
By D. Argyll Robertson 227

IX. DISEASES OF THE ORBIT.

1. A case of orbital cyst, probably a dacryops. (With Plate IV.) By Arnold Lawson 233
2. Implantation cyst of orbit; microscopic section.
By G. Anderson Critchett and John Griffith 242
3. Notes of a case of melanotic sarcoma of the orbit.
By Richard Williams (Liverpool) 243
4. Sarcoma of orbit; recurrence after removal, with extension to the cranial cavity. By Simeon Snell 245
5. Enophthalmos becoming exophthalmos on stooping or on compression of the jugular vein.
By W. Lang and A. H. Thompson 250
6. Foreign body in the orbit for four years; sympathetic irritation; excision of the blind eye; recovery.
By John R. Lunn and C. Devereux Marshall 252

X. CONGENITAL ABNORMALITIES.

1. Microphthalmos with cystic protrusion from the globe.
By E. Treacher Collins 254
2. A case of microphthalmos with cyst.
By John R. Rolston 266

PAGE

3. Congenital closure of the inferior lacrymal punctum, and absence of the canaliculus; operation and cure. By H. Macnaughton Jones, M.D. 271
4. Congenital malformation of the puncta lacrymalia. By R. W. Doyne 272
5. A case of arrest of development of the crystalline lens with apparent (? real) subluxation outwards. By John Griffith 273
6. A case of coloboma of the lens. By Adolph Bronner, M.D. (Bradford) 275

XI. MISCELLANEOUS.

1. Central amblyopia as an early symptom in tumour at the chiasma. By E. Nettleship 277
2. Some cases of sympathetic ophthalmitis. By F. R. Cross 300
3. On the mounting of macroscopic eye specimens. By C. Devereux Marshall 312
4. Model illustrating Tscherning's theory of the accommodation. By Priestley Smith (Birmingham) 316
5. The varieties and degrees of colour-blindness. By F. W. Edridge-Green, M.D. (Communicated by Henry Power) 320
6. Young woman presenting the clinical characters of embolism of the central artery of the retina, first in one eye and then in the other; no evidence of heart disease; amenorrhœa and epistaxis; ? hæmorrhage into the optic nerve sheath. By E. Treacher Collins 324
7. A peculiar fundus oculi. By H. Work Dodd 326
8. Result of iridectomy in a case of chronic glaucoma. By R. Marcus Gunn 328
9. Case of cataract extraction in an albino. By Arthur Sandford, M.D. 332

PAGE

10. An attack of herpes ophthalmicus occurring shortly after extraction of cataract on the same side.
By Simeon Snell 334

11. Double facial paralysis and complete deafness; ulcers of cornea due to exposure; affection of the chorda tympani. By John R. Lunn 335

12. A stitch for the advancement or adjustment of the ocular muscles.
By H. Lindo Ferguson, M.D. (Dunedin, N.Z.) 336

Appendix 338

Report of Council 339

Index 343

LIST OF PLATES.

PLATE		FACING PAGE
I.	Tuberculosis of the conjunctiva. (Dr. J. W. H. EYRE.) (Page 8) . . .	14
II.	Fig. 1. Retinal pigmentation. (Mr. JULER.) (Page 50)	46
	Fig. 2. Detachment of the retina; choroidal atrophy. (Mr. SILCOCK.) (Page 45) .	
III.	Intra-ocular cysticercus. (Dr. A. HILL GRIFFITH.) (Page 220) . .	222
IV.	Orbital cyst, probably a dacryops. (Mr. ARNOLD LAWSON.) (Page 233) . .	234

LIST OF DIAGRAMS AND ILLUSTRATIONS IN THE TEXT.

FIG.		PAGE
1.	Field of vision	41
2.	,, ,,	41
3.	,, ,,	57
4.	,, ,,	57
5.	,, ,,	69
6.	,, ,,	69
7.	,, ,,	70
8.	,, ,,	70
9.	,, ,,	74
10.	,, ,,	74
11.	,, ,,	92
12.	,, ,,	96
13.	,, ,,	135
14.	,, ,,	136
15.	,, ,,	138
16.	,, ,,	138
17.	,, ,,	141
18.	,, ,,	141
19.	,, ,,	155
20.	,, ,,	156
21.	,, ,,	157
22.	,, ,,	158
23.	,, ,,	159
24.	,, ,,	162
25.	,, ,,	162
26.	,, ,,	163
27.	,, ,,	163
28.	,, ,,	165
29.	,, ,,	165
30.	,, ,,	166
31.	,, ,,	166
32.	,, ,,	167
33.	,, ,,	167

FIG.		PAGE
34.	Field of vision	202
35.	,, ,,	204
36.	,, ,,	204
37.	,, ,,	206
38.	,, ,,	206
39.	Tumour of orbit	248
40.	Microphthalmos with cyst	260
41.	,, ,,	264
42.	,, ,,	268
43.	Field of vision	283
44.	,, ,,	283
45.	,, ,,	286
46.	,, ,,	286
47.	,, ,,	287
48.	,, ,,	287
49.	,, ,,	291
50.	,, ,,	291
51.	Diagram of brain and tumour	294
52.	,, ,, ,,	294
53.	,, ,, ,,	295
54.	Diagram illustrating Tscherning's theory of the accommodation	318
55.	Field of vision	329
56.	,, ,,	329
57. 58.	Stitches in adjustment of ocular muscles	337

REPORTS.

I. DISEASES OF THE CONJUNCTIVA.

1. *Pemphigus or essential shrinking of the conjunctiva.*

By A. Quarry Silcock.

Eliza P—, æt. 8, was admitted to the Royal London Ophthalmic Hospital, Moorfields, on November 13th, 1895, by reason of conjunctivitis with corneal infiltration. The child was anæsthetised, and the corneæ and fornices of the conjunctivæ examined. The mucous membrane was extremely hyperæmic, everywhere thickened, and generally œdematous; from that covering the tarsi of both upper and lower lids, projected moist, flattened, papillary growths, which were snipped off. The right cornea was clear, the left infiltrated. There were sores and scabs about both anterior nares, and it was supposed at this time that the conjunctivæ might have become infected therefrom. The sores in question were most intractable to ordinary methods of treatment. Notwithstanding every care the left cornea perforated, and on December 31st the left globe was excised.

On March 24th the girl was readmitted, and the following are the notes of her condition at that time, written by Dr. Fischer, the then senior house surgeon of the hospital:

"R. E.: much thickening and shrinking of conjunctiva of lids; upper lid inverted, lashes rubbing on globe.

Conjunctival surface of upper lid scarred; conjunctival cul-de-sac much contracted. There is considerable thick, glutinous yellow discharge. Cornea, superficial ulceration at lower part. Ciliary injection; pupil active. L. conjunctival cul-de-sac much shrunken, and conjunctiva thickened.

"April 4th, 1896.—R. cornea seems to be ulcerating in the same way as L. cornea did. There is infiltration in the substance of the cornea with superficial ulceration. The ulcer is covered with yellow stringy discharge; the latter re-forms as soon as it is removed. Conjunctiva appears to be shrinking; it is smooth and cicatrised, but deeply injected. External canthus divided under anæsthetic.

"7th.—Ulcer continues to spread in spite of everything. Roof of mouth has a peculiar patch of epithelium. Much discharge from nose; no bullæ seen on nose or tongue. Scars of old ulcers of fauces.

"May 1st.—Child wakes up two or three times during the night with spasmodic cough, as if there were some obstruction in the air-passages. Has once coughed up a tough, hard mass of what was possibly membranous exudation.

"June 17th.—Left socket has practically become obliterated. R. cornea quite opaque, and conjunctiva shrinking."

In regard to treatment, I may remark that although we did all we knew to effect disinfection of the conjunctival sac of the R. E., the means we employed were completely inefficacious. At first we had no idea as to what the pathology of the case could be; as I have said, we assumed that the conjunctivæ had been infected from the sores about the nose, and this was probably true, but we did not know what these sores were due to. Not until April did it dawn upon us that the case was of the same category as those which have been described as pemphigus or essential shrinking of the conjunctiva. No bullæ of the skin or mucous membranes of the mouth or pharynx

had up to this time been noticed. In October the patient was brought to me, and I found well-marked bullæ on the skin of the feet, forearms, and face.

Mr. Plimmer, the Lecturer on Bacteriology at St. Mary's Hospital, kindly examined bacteriologically the contents of an unbroken bulla, and will, with the permission of the Society, give his results.

The condition of the conjunctival sacs is now quite typical of the disorder—they are much shrunken, especially the left, the conjunctiva being thickened, and when exposed being abnormally dry. Symblepharon has occurred, so that the palpebral opening is much narrowed. That of the left sac, though in less marked degree, is quite as typical of the disease as the right; the cornea is quite opaque, and the ocular conjunctiva dry, its epithelium being keratinised and thickened. The vision amounts to a mere perception of light.

Mr. Plimmer has kindly made the following report for me on the bacteriology of this case.

"The bacteriology of pemphigus, though very scattered, is very uniform in the results which have been obtained by various observers. Of course, the fact of not being able to reproduce the skin lesions in animals prevents the direct ætiological relation of the organisms which have been isolated by various observers from being proved; but the similarity of these organisms in form and reaction is very suggestive, to say the least of it. I will, on this account, mention here the results obtained by those who have worked specially at this subject.

"As long ago as 1841 Scharlau demonstrated that the contents of the bullæ in pemphigus neonatorum were inoculable; and Röser in 1876 first described micrococci as occurring in the fluid from the bullæ. In 1882 Vidal and Gibier described the occurrence of cocci in chains in the bullæ; and Gibier, in a drawing in his paper in the 'Annales de Dermatologie' for that year, draws, as well as chains, several diplococci which are apparently similar to those I shall mention later. Colrat, in 1884, in an

epidemic of pemphigus, found a large number of diplococci in the fluid of the bullæ in many of the patients.

"It was not, however, until 1886 that the organism, which seems to have been identical in all the above-mentioned observations, was isolated in pure culture by Demme, whose name the organism bears—the micrococcus of Demme—in such scanty notices of it as the text-books give.

"He isolated this organism from a bulla in a case of acute pemphigus, and he states that it is a micrococcus ·8—1·4 μ in diameter. They are usually united in pairs resembling the gonococci, and are very opaque, and not surrounded by a capsule; they are also sometimes associated in irregular masses. They are aërobic micrococci, and do not grow at room temperature. The colonies on agar are white and spherical; later small outgrowths appear at the periphery of the colony, giving it a rosette-like appearance. No positive results were obtained by inoculation into various animals, but some of the guinea-pigs used died from broncho-pneumonia, in the post-mortem patches of which the cocci were again found.

"Dähnhardt, in 1887, in a case of chronic pemphigus, found organisms which he describes as identical with those of Demme. Techmeister in 1887, and Strelitz in 1890 and 1892, also describe a similar organism in cases of pemphigus.

"Almquist, in 1891, during an epidemic of pemphigus neonatorum at Göteborg, examined seven of some one hundred cases, and described the organism he found as the *Staphylococcus pyogenes aureus*. He inoculated his own arm with the organism, and produced typical bullæ. It may have happened that these diplococci were present with the staphylococci, and that they may thus have escaped notice. Moreover this organism often arranges itself in masses, so as to simulate staphylococci, so there is just a chance that the micrococcus described by Demme may have been the cause of this epidemic.

"Bleibtreu and Claessen, in 1893, in a case of pem-

phigus acutus described an organism which in cultural and pathogenic properties they considered to be identical with that of Demme. This year Pernet and Bulloch described an organism, which they considered identical with Demme's, occurring in a fatal case of pemphigus acutus; and Whipham and Wells described the same organism in two cases of pemphigus. Dr. Bulloch saw the cultures from these cases, and he told me that they were identical with those he isolated from the case of Mr. Pernet.

"I saw Mr. Silcock's case on October 27th, 1896, and from one bulla on the back of the right hand I took with a sterilised Pasteur's pipette a small quantity of fluid. I also made a cover-glass preparation which showed a few cocci only, which were mostly arranged as diplococci. From the fluid in the pipette I made one agar plate and one gelatine plate. The agar plate was incubated, and the next day a number of round white colonies had developed; these were pure cultures of a micrococcus which in all respects corresponded morphologically with that described by Demme. I have also been able by Dr. Bulloch's kindness to compare these with the organism isolated by him, with which they are identical. From this plate cultures were made on various media. The gelatine plate showed but a slight growth after eight days, only a few colonies appearing; these were similar to those on the agar plate, so that the fluid apparently contained a pure culture only of this organism.

"In bouillon at 37° it grows rapidly; the broth is at first cloudy, but at the end of forty-eight hours it becomes clear, and a precipitate settles at the bottom of the tube.

"On agar at 37° it forms at the end of twenty-four hours small discrete white colonies, which may remain discrete for some time. Some, however, will join together by means of processes such as were described by Demme.

"On serum at 37° the colonies are much smaller and less distinct than on agar.

"On gelatine at 22° there is a very slight growth, and

after some time (two or three weeks) slight liquefaction.

"Microscopically they are micrococci, often occurring as diplococci, a little larger than gonococci; they stain well with all basic aniline colours, and densely by Gram's method.

"The experimental part of the subject has still to be worked out. One tenth of a c.c. of a recent beef-tea culture injected into the peritoneum of a mouse caused death with acute peritonitis in fourteen hours. The organisms were found after death in the blood. Two c.c. of the same culture were injected into the pleural cavity of a guinea-pig, which died forty-eight hours after from septicæmia.

"A drop of the same culture was inserted into a rabbit's eye after slight scarification of the conjunctiva; at the end of two days there was an intense inflammation of the cornea and conjunctiva with suppuration, and later on destruction of the eye. This occurred much more rapidly than in similar conditions produced by other septic organisms.

"Of the definite causal relation of this organism to the disease, it is, as I stated above, impossible at present to speak. All that can be said is that this micrococcus was found in pure culture in an unruptured bulla of this case; that it does not correspond to any of the normal known inhabitants of the skin; that it is not any of the staphylococci or streptococci, nor can I identify it as occurring elsewhere, and therefore on this account I do not think it likely to be a contamination of the bulla; that it is an organism precisely identical morphologically and experimentally as far as our experiments have gone, with the organism described by those observers I mentioned at first, especially Demme, Bulloch, and Wells, in cases of pemphigus; that it is pathogenic to mice, guinea-pigs, and rabbits.

"Such are my conclusions, and they point very strongly in my opinion to the distinct relation of this organism with the disease; but the bacteriological examination of

more cases and many more experiments on animals must be made before anything more certain can be stated.—H. G. Plimmer."

(*Card specimen. December 10th*, 1896.)

Mr. Malcolm Morris said he feared his remarks would not throw much light on this obscure disease. He had watched one case from almost its start to nearly complete loss of both eyes, and had observed the symptoms not only in the eyes, but also in the mucous membrane of the mouth and the skin. A very keen controversy was being waged among dermatologists as to the nature of the various diseases which produced bullæ on the skin. They were so varied in their clinical histories and features, that very great difficulty was experienced in diagnosing the disease called pemphigus. He did not think the disease which Mr. Silcock showed him was true pemphigus. A woman had come to his out-patient room recently with vesicles and bullæ all over the tongue and mucous membrane of the mouth, lips, inside of cheeks, pharynx, and larynx. It was impossible to diagnose it then, but in a few days vesicles began to appear on the skin, in a form exactly like vaccination vesicles, and had the appearance described by Bazin as *hydroa vacciniformæ*. It was possible that in some cases the disease might begin in the eye, and then proceed to the skin and mucous membrane. But before they could be certain about bacteriological experiments it should be settled that the cases were clinically similar.

2. *Tuberculosis of the conjunctiva.*

By J. W. H. Eyre, M.D.

(From the Bacteriological Laboratory, Guy's Hospital.)

(Plate I.)

The comparative rarity of cases of tuberculosis of the conjunctiva, coupled with the fact that the recognised text-books either entirely ignore the condition, or dismiss it in a few lines, must be my excuse for presenting my personal observations on this subject.*

A total of 8 out of 25,000 new ophthalmic cases since 1893, is sufficient evidence of the infrequence of the lesion. Other observers have also commented upon the rarity of these cases, Hirschberg giving the proportion as 1 in 6000, and Mules as 1 in 30,000.

The first recorded case of tuberculosis of the conjunctiva was communicated by Koster, in 1874, to the 'Centralbl. f. med. Wissenschaften,' but it was not until many years later that we find any considerable number of records of cases in which the diagnosis has been proved by the demonstration of the tubercle bacillus in the morbid tissues, or by the results of inoculation experiments performed upon the lower animals. Evidence such as this was not of course available before 1882, when Koch published his researches on tuberculosis and the tubercle bacillus, and in the appended bibliography I have only mentioned papers published subsequent to that date.

Classification.—In 1891 Sattler published his researches upon 'Conjunctival Tuberculosis,' and, realising the neces-

* In these notes no mention is made of the question of the tuberculous nature of chalazion formation, a question which afforded controversial matter to the pathological world for many years, and which even now does not appear to be on a very satisfactory footing.

sity for some system of grouping the various forms assumed by this disease, adopted a classification based upon broad clinical characters and naked-eye appearances—a classification which for all general purposes holds good at the present day—as follows:

Group I.—Characterised by the presence of small miliary ulcers, which later on may coalesce, generally attacking the palpebral, but sometimes affecting the bulbar conjunctiva. (Case 1.)

Group II.—Characterised by the presence of greyish or yellowish subconjunctival nodules, varying in size, but rarely larger than a hemp-seed, not unlike the sago granules of trachoma. (Cases 2 and 3.)

Group III.—Characterised by the presence of florid hypertrophied papillæ and rounded outgrowths of granulation tissue, springing from the palpebral conjunctiva, or situated in the fornices, and which soon recur after removal (resembling in many respects the velvety granulations present in a tuberculous arthritis). These granulations are accompanied by œdema and thickening of the lids. (Cases 4 and 5.)

Group IV.—"Lupus" of the conjunctiva, characterised by numerous pedunculated, cockscomb-like excrescences in the fornices, of a jelly-like consistency, often showing more or less extensive ulceration. (Case 6.)

Group V.—To the above four groups one more should be added, in order to embrace those cases which are characterised by the existence of distinctly pedunculated tumours, having the macroscopic appearances of ordinary papillomata (*vide* Cases 7 and 8), and also such as those designated by Mitvalsky as "true polypus of the conjunctiva,"—cases where there is no involvement of the subconjunctival tissue, nor the production of any subjective symptom other than slight inconvenience due to purely mechanical causes.

Ætiology.—That the tubercle bacillus is the active causal factor in the production of the condition under discussion there can be no possible doubt. In Groups

I, II, and V the bacillus can generally be demonstrated in sections of the diseased conjunctiva by means of suitable staining processes with comparative ease. The tubercle bacilli when observed in such sections are found to occur either singly or in small groups of three or four, and but very rarely in larger clumps of ten, twenty, and thirty. They are scattered throughout the tissue, and bear no constant relationship to the giant-cells. With regard to the representatives of Group III, where the condition is one of hyperplasia, sections of the superabundant granulations do not, as a rule, show many bacilli; indeed, one may hunt through scores of serial sections without finding any. Although, according to some, the presence of the tubercle bacillus in the conjunctival secretion of these cases is fairly constant, I have never been able to detect it in this fluid.

In the absence of the tubercle bacillus from the microscopical sections, valuable information may be obtained from the result of inoculation experiments, a method of ascertaining the presence of the tubercle bacilli more reliable than microscopical examination, but requiring a much longer time (six or eight weeks) before the question can be definitely settled.

From a consideration of many factors, it is evident that tuberculosis of the conjunctiva cannot always be regarded as an expression of general tuberculosis, although it is quite feasible that it may occasionally be so, for in the majority of the cases where this condition obtains the most careful and thorough examination fails to detect evidence of tubercle elsewhere. Under such circumstances the conjunctival lesion is nothing more than a direct local infection resulting from the introduction of tuberculous material into the conjunctival tissues, and it may be safely asserted that in the cases belonging to Groups I, II, and V this is invariably the rule. An abrasion of the conjunctiva, the result of some slight trauma, or a phlyctenule broken down and ulcerated (perhaps the commonest form of eye trouble in debilitated children),

makes an excellent nidus for the tubercle bacillus, which may be conveyed thereto by the fingers of the patient; a towel used in common by the patient and his or her relatives; or, possibly, through the medium of floating particles of desiccated phthisical sputum, whilst Fano's case and one incidentally mentioned by Knapp are both probably the result of direct inoculation during tenotomy operations for the relief of strabismus.

The following data bearing upon the ætiology of tuberculosis of the conjunctiva have been obtained from a comparative study of authenticated cases recorded up to the present time.

Age.—The age-limit within which tuberculosis of the conjunctiva occurs is very wide. The youngest case recorded is that of an infant of ten months; the oldest, a man of thirty years. The majority of the cases, however, occur between the ages of ten and twenty, and are especially noticeable at or about puberty.

Sex.—Females appear to be slightly more liable to this form of tuberculosis than males, the proportion being about 1·5 to 1.

Situation.—The palpebral conjunctiva is much more often the seat of the lesion than the bulbar, and that of the lower rather than the upper lid. No preference is of course shown for one eye over the other, but it is much more common for the disease to be limited to one eye than for it to be bilateral. The cornea is often affected during the course of the disease, the condition being one of superficial keratitis, sometimes accompanied by iritis.

Glandular enlargement.—It is usual to find the preauricular gland of the affected side swollen, firm and tender, and often painful. It does not, as a rule, break down and suppurate. Rarely the submaxillary and even the cervical glands of the corresponding side may become infiltrated.

Cases.

Group I.—1. W. B—, male æt. 7½ years, came under observation on account of "the large ulcer on the white of the right eyeball."

History.—Patient had always enjoyed good health until about three months ago, when some small red pimples (? phlyctenules) were noticed on the outer side of the right eye. These became larger, ran together, and "broke" three weeks ago. Since that time the present condition had existed. No tuberculous history, either family or personal, could be elicited.

On examination.—R. E.: the bulbar conjunctiva covering the temporal side of the globe was found to be the seat of an elevated oval patch of granulation tissue measuring some 1·7 mm. by 1·2 mm., its long axis concentric with the corneal margin. The centre of this mass was occupied by an apparently depressed, reniform, yellowish, caseous area, 1·2 mm. in length by 0·4 mm. at its broadest part. The edges were well defined, the fundus covered with cheesy detritus, being about 2 mm. below the level of the surrounding granulations (*vide* Pl. I, fig. 1). Marked injection of the bulbar and palpebral conjunctivæ was present, and a few flakes of muco-pus in the lower fornix. Photophobia was complained of, together with some pain. The pre-auricular gland of the right side was enlarged. L. E. normal.

Treatment.—The whole of the diseased area of the conjunctiva was excised, and the edges of the healthy conjunctiva drawn together by means of fine silk sutures. The lad made a good recovery; four years later was reported as in excellent health, and there was no return of the local lesion.

Microscopical examination of the excised portion of conjunctiva showed the presence of numerous giant-cell systems, together with large numbers of tubercle bacilli.

Group II.—2. J. M—, male æt. 20, sought advice on account of pain and constant watering of the right eye, accompanied by some loss of vision, of two months' duration. No tuberculous history, either family or personal, could be obtained.

On examination.—R. E.: the ocular and palpebral conjunctivæ were found to be much injected, many of the conjunctival vessels running over the edge of the cornea on to its surface. The lower half of the cornea was hazy, and showed loss of surface epithelium, and in parts fairly extensive ulceration. The iris was discoloured but freely active. In the lower fornix was seen a row of raised, spherical, greyish-yellow, subconjunctival nodules, four in number, of various sizes, the largest being about 3 mm. in diameter. These were adherent to the tarsal cartilage, and also involved the conjunctiva. Photophobia and profuse lacrymation were also noted.

The pre-auricular gland on the right side was much swollen. V. = $\frac{6}{12}$, unimproved by lenses.

L. E. normal. V. = $\frac{6}{6}$, with + 0·5 D. sph. = $\frac{6}{5}$.

Treatment.—The row of nodules was excised, together with a strip of healthy conjunctiva on either side, and the galvano-cautery applied to the denuded surface. The corneal ulceration was treated with Lot. Acidi Borici (grs. v ad ℥j) to bathe the eye frequently, Gtt. Atrop. Sulph. (grs. ij ad ℥j) instilled thrice daily, and Vas. Hyd. Ox. Flav. (grs. iv ad ℥j) applied every night.

Result.—Recovery. Corneal nebulæ. V. unimproved. No return of the local lesion one year later.

Microscopical examination of the excised nodules showed them to consist of typical grey tubercles in a matrix of fibrous tissue. The giant-cells were large and numerous, and the *Bacillus tuberculosis* was present in fairly large numbers. The microscopical characters rendered it most probable that the disease had started in the conjunctiva.

3. E. J—, male æt. 1 year and 8 months, was brought

by his mother on account of a gradually increasing swelling of the right upper eyelid, which she had noticed for the past two months. This was her first child, the family history of the parents was good, and no evidence of tubercle elsewhere could be detected in the patient.

On examination.—R. E. : the external aspect of the right upper eyelid showed several slight elevations of the skin, such as might be produced by small tarsal cysts. On everting the lid the palpebral conjunctiva was seen to be injected, and a row of five small subconjunctival nodules was noted, situated over the middle third of the long axis of the tarsal cartilage. The individual nodules were raised and spherical, of about 1 to 2 mm. diameter, freely moveable over the subjacent cartilage, but involving the conjunctiva covering them, firm in consistence, and of a deep red colour, but having a somewhat paler spot at the summit (Pl. I, fig. 2). The bulbar conjunctiva, the cornea, and the palpebral conjunctiva of the lower lid were perfectly normal. Pain was obviously absent, and there was neither photophobia nor lacrymation. Slight intumescence of the right pre-auricular gland was also noted. L. E. normal.

Treatment.—The row of nodules was excised, together with a strip of healthy conjunctiva on either side, the tarsal cartilage beneath being laid bare.

Result.—Recovery. The patient is still under observation. Up to the present time no recurrence of the local lesion has taken place.

Microscopical examination of the excised tissue showed portions of perfectly normal conjunctival and subconjunctival tissue, interspersed with small grey tubercles and giant-cell systems surrounded by inflammatory exudation. A certain amount of healthy Meibomian gland tissue was also noted. Tubercle bacilli were present in small numbers.

Group III.—4. S. E. P—, female æt. 23 years, was admitted into Martha Ward, Guy's Hospital, under Mr.

PLATE I.

Dr. J. W. H. Eyre's paper on Tuberculosis of the Conjunctiva.

FIG. 1.—Sketch of Case 1: showing granulations on the temporal side of the bulbar conjunctiva of the right eye, with central caseous mass.

FIG. 2.—Sketch of Case 3: right eye, upper lid everted, showing row of subconjunctival nodules.

FIG. 3.—Sketch of Case 4: right eye, both lids everted, showing prominent granulations.

FIG. 4.—Sketch of Case 7: right eye, showing papillary tumour springing from the conjunctiva of the lower lid.

Fig. I.

Fig II.

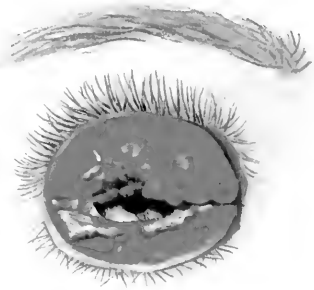

Fig. III.

Fig. IV

H. Toogood Hill del.

Bale & Danielsson, Chromo-Lith.

Golding-Bird, for excision of tuberculous cervical glands, which had been enlarged since an attack of measles six years ago. These had "broken" and discharged for some twelve months past. (It is noted in the report that a younger brother suffered from a similar condition.) The sinuses were incised and scraped, and when the wounds had healed the patient was transferred to Ruth Ward under Dr. Brailey, on account of a muco-purulent discharge from both eyes.

History.—The left eye first troubled patient about fifteen months ago by aching and discharging "matter." About six months ago the right eye was similarly affected, and each felt as if some foreign substance was in it. On depressing the lower lids with her finger, patient became aware of the presence of numerous little red lumps on the inside of the eyelids.

On examination.—R. E.: numerous corneal nebulæ are present. Both the bulbar and palpebral conjunctivæ much injected, and completely covered with deep red prominent granulations, which readily bleed when touched with a probe. These are especially noticeable in the lower fornix, and immediately start into view when the lower lid is depressed or the upper lid everted. On the summit of some of these prominent granulations may be seen minute miliary ulcers, having steep, well-defined walls, and fatty, caseous-looking bases (Pl. I, fig. 3). Slight photophobia noted, also the presence of a profuse muco-purulent discharge. The pre-auricular gland on the right side much enlarged. V. $= \frac{5}{60}$ with -2 D. sph. $= \frac{6}{36}$.

L. E.: condition similar to that already noted in the R. E., but decidedly more pronounced. A considerable amount of ectropion of the lower lid also present. The pre-auricular gland on this side also enlarged. V. $= \frac{2}{60}$, not improved with lenses.

Treatment.—Mainly directed against the purulent discharge, which, as a result, was checked to some extent, and the patient thereby relieved. Although the condition was decided to be too far advanced for operative treat-

ment, several of the larger granulations were removed for the purpose of microscopical examination. Rapid recurrence was observed after excision.

Microscopical examination of the excised portions showed them to consist of hypertrophied papillæ, infiltrated by a small-cell exudation, and exhibiting typical grey tubercles. The giant-cell systems were well marked. No tubercle bacilli could be found.

Inoculation experiment.—A small portion (3 mm. cube) of the granulation tissue was introduced into the anterior chamber of a guinea-pig's eye. This was rapidly absorbed; then in about a month the cornea became opaque, and the tension rose. After remaining in this condition for a fortnight the animal died from general tuberculosis. Sections of the eye showed that the interior of the organ was converted into a mass of small-celled tissue, the central portion of which was caseous, with numerous giant-cell systems. Enormous numbers of tubercle bacilli were found in this situation, and also crowding the lymph channels between the investing tunics of the eye.

5. E. C—, female æt. 23 years, first came under observation on account of a symmetrical solid œdema (solid œdema of Hutchinson?) of both eyelids.

History.—When fourteen years old patient had an attack of facial erysipelas, which lasted for ten weeks; the lids of both eyes were puffed up and the eyes closed. At eighteen she was attacked a second time, and when convalescent it was noticed that the right lower lid was rather thick, a condition which persisted until the third attack at twenty-two years. The immediate result of this, the most recent attack, was to leave the upper lid of the right eye in a like condition to the lower. A few months later the lids of the left eye became thick and swollen, and to such an extent did the swelling advance that the palpebral fissure was reduced to a mere slit. Patient states that

she was operated upon for an eruption on the face (? lupus) about seven years ago, and at the same time for large glands in the neck. Scars corresponding to these operations are plainly visible. She has an ulcer (probably tuberculous) on the dorsum of the left foot, and is at the present time under treatment for tuberculous caries of the right ulna. Three weeks ago patient noticed that there was a slight discharge from the left eye, and a sensation of grit in the eye.

On examination.—R. E.: the lids, enormously swollen, appeared to be the seat of a local œdema. When, however, the lids were handled they were found to be much thickened, and were quite firm, as if from a fibrous deposit in the subcutaneous tissue. (Elliptical pieces of skin and subcutaneous tissue had previously been excised from the lids of the right eye, an operation which had restored a fair range of movement to the lid.) On depressing the lower lid the lower fornix presented numerous prominent granulations, arranged in ridges along its entire length, which were similar in all respects to those described in the preceding case. There was slight lacrymation and some photophobia. The right pre-auricular gland was enlarged. V. = $\frac{6}{36}$. No improvement with lenses.

L. E.: the lids were thickened in exactly the same manner as those of the right eye, but to a less degree. Conjunctiva normal. The left pre-auricular gland was not enlarged. V. = $\frac{6}{9}$. No improvement with lenses.

Treatment.—The ridges of granulations were removed from the right lower fornix with a pair of scissors.

Result.—No recurrence after six months.

Microscopical examination of the excised portions revealed nothing beyond ordinary granulation tissue, small round cells, and capillary loops. No tubercle bacilli could be found.

Inoculation experiment.—A small piece of this granulation tissue after removal was introduced into the subcutaneous tissue of the groin of a guinea-pig. Ten

weeks later an abscess had formed at the seat of inoculation. This was opened, and the pus when examined microscopically found to contain tubercle bacilli only, no other pyogenic micro-organisms being present. (The abscess cavity was thoroughly scraped with a sharp spoon, then closed with an aseptic dressing, but the animal succumbed to general tuberculosis a fortnight later.)*

Group IV.—6. X. Z—, male æt. 15 years. This case was under the care of Dr. W. J. Collins at the North-west London Hospital, and to him I am indebted for the opportunity of seeing the case, and also for permission to refer to it here.

The patient had been the subject of lupus vulgaris of the face. The area affected was the upper lip and the margins of the alæ of the nose. The disease had afterwards spread upwards on the left cheek, and then involved the skin and conjunctival surface of the lower lid. The eye trouble was of some years' duration, and was accompanied by extensive ulceration of the cornea. The right eye was normal.

Treatment.—The whole of the affected area was thoroughly scraped with a sharp spoon. The result was excellent in so far as the face was concerned, but recurrence took place in the conjunctiva.

Group V.—7. A. B—, female æt. 28 years, desired the removal of the red lump which was just visible within the palpebral fissure of the right eye.

History.—A small lump on the inner side of the right lower lid had been first noticed five months previously. This gradually enlarged, and a certain amount of inconvenience was experienced; also slight lacrymation and gumming of the lids on awakening in the morning. At first the growth was only occasionally extruded through

* The above two cases (4 and 5) were under the care of Dr. Brailey, to whom I desire to express my thanks for the ready permission to include them in this paper.

the palpebral fissure, but for the three days immediately preceding the patient's visit this condition had been constant. No evidence of a family or personal tuberculous history could be obtained.

On examination.—R. E.: the bulbar conjunctiva of the right eye was normal. The palpebral conjunctiva of the lower lid was slightly injected, and from about the central point of this aspect sprang a small pale warty-looking tumour, measuring about 10 × 4 × 2 mm. (Pl. I, fig. 4). The slender pedicle was of such length (3 mm.) that the entire body of the growth protruded between the lids, and these latter could be approximated without much difficulty. The right pre-auricular gland was slightly enlarged. V. = $\frac{6}{6}$. No manifest hypermetropia.

L. E. normal. V. = $\frac{6}{6}$. No manifest hypermetropia.

Treatment.—The pedicle was divided close to its conjunctival attachment, and the base cauterised. At the end of a week the wound had healed. The patient was afterwards lost sight of.

Microscopical examination of the tumour showed it to be made up of small-celled granulation tissue, with a certain amount of fibrous tissue arranged in bundles running through its substance, together with some large thin-walled cavernous blood-spaces. No tubercle bacilli could be seen.

Inoculation experiment.—A small portion of the growth was inoculated into the subcutaneous tissue of the groin of a guinea-pig. Six weeks later the animal died with all the post-mortem appearances of general tuberculosis. Tubercle bacilli were found in the lymphatic glands.

8. F. B—, female æt. 9 years, was brought by her mother on account of a small growth on the inside of the left lower eyelid.

History.—Ten months ago the child was taken to the Royal Eye Hospital (Southwark), and a precisely similar growth to the present one, and which had then been present for three months, was removed from the inside of

the left lower eyelid. For five months after the operation the lid appeared quite well, but during the last four months the growth had re-formed. Though it had rapidly increased in size it had given but little trouble. There were no indications of tuberculous lesions elsewhere, although a family history of phthisis was elicited.

On examination.—R. E. normal. V. = $\frac{6}{6}$. No manifest hypermetropia. L. E.: the bulbar and palpebral conjunctivæ were normal. From a spot near the centre of the conjunctival aspect of the lower lid there springs a small cherry-red warty-looking tumour (measuring about 6 × 3 × 3 mm.) by a short constricted pedicle. When the lids were closed the position of the tumour was indicated externally by a marked elevation of the skin surface of the lower lid, resembling that produced by a tarsal cyst. The left pre-auricular gland was enlarged. V. = $\frac{6}{6}$. No manifest hypermetropia.

Treatment.—The pedicle was divided at its conjunctival attachment, and the base touched with the actual cautery.

Result.—When the child was seen a year later the site of the tumour was indicated only by a small area of cicatricial tissue; there was no recurrence of the growth. The child was said to be wasting. The submaxillary and cervical glands on both sides were enlarged, and the physical signs of phthisis were present at the right apex.

Microscopical examination of the tumour showed that it consisted of small-celled granulation tissue, held together by bands of fibrous tissue arranged in the form of papillæ, and covered by a layer of conjunctival epithelium some two or three cells thick. Here and there were scattered characteristic tubercle nodules, containing giant-cells and a few tubercle bacilli.

I would draw particular attention to these two cases representing the fifth group, for I venture to think that no one would have recognised the tuberculous character

of the lesion simply from a consideration of the clinical appearances.

In point of time Case 8 came under observation before Case 7, and, indeed, had it not been for the discovery of tubercle bacilli in sections of the tumour from Case 8, I should not have performed an inoculation experiment when I failed to detect that organism in the other case.

Diagnosis.

Beyond pointing out that circumstances might arise rendering it necessary to distinguish between tuberculosis of the conjunctiva and such widely differing lesions as epithelioma, ordinary papilloma, folliculitis, trachoma, chancre, &c., it is not my intention to enter into any discussion on the differential diagnosis of this condition. I may, however, remark that it is often extremely difficult to satisfactorily settle the diagnosis without the assistance of the microscope or even inoculation experiments.

Treatment.

The treatment of tuberculosis of the conjunctiva must be conducted upon lines precisely similar to those which guide us in the treatment of local tuberculous lesions in other organs, viz. early and complete removal of the diseased area. The means by which this end is attained, whether by the use of the knife, the sharp spoon, or the galvano-cautery, must be left to the discretion of the individual surgeon, but it is obvious that the removal of the affected tissues must be thorough. If any of the tuberculous material whatever be left *in situ* it may, and possibly will, become the starting-point of a general tuberculosis. (This is probably what took place in the eighth case recorded above.)

In advanced cases, where large areas of tissue are involved, complete removal is not always practicable, and a permanent cure must not be expected. Under

these circumstances palliative treatment only can be pursued.

Attention to the general hygiene, combined with appropriate constitutional treatment, whilst of great value, must be regarded as secondary only to the removal of the local lesion.

Bibliography.

Amiet. 'Die Tuberculose der Conjunctiva,' Inaug. Dissert., Zurich, 1887.

Arlt. "Lupus der Conjunctiva," 'Zehender's Monatsbl.,' 1884, p. 332.

Benda. "Ueber die Beziehungen von Lupus und Tuberkulose," 'Deutsch. med. Wochenschr.,' 1886, No. 23.

Benson. "Primary Lupus of the Conjunctiva," 'Trans. Ophth. Soc.,' 1885.

Bronner. "Tubercular Growth of the Conjunctiva," 'Trans. Ophth. Soc.,' 1896.

Burnett. "Tuberculosis of the Conjunctiva," 'Archiv. of Ophth.,' vol. xix, 1890.

Csapodi. "Tuberkulose der Conjunctiva," 'Pest. med.-chirurg. Presse,' 1889.

Denig. "Ueber die Haufigkeit der Lokaltuberkulose des Auges," 'Archiv f. Augenheilk.,' Bd. xxxi, Heft 4.

Elschnig. "Ein Fall von Tuberkulose der Bindehaut," 'Wiener med. Presse,' 1889.

Falchi. "Granuloma e Tuberculosi di Congiuntiva," 'Gior. d. R. Accad.,' Torino, 1883.

Fano. "Tuberculose ague de la conjonctive," 'Journ. d'Ocul. et de Chirurg.,' 1881.

Fuchs. "Tuberkulose der Conjunctiva," 'Wiener med. Presse,' 1886.

Gayet. "De la tuberculose conjonctivale," 'Bull. et Mém. Soc. Franç. d'Oph.,' 1885.

Griffith. "Case of Primary Lupus of the Conjunctiva," 'Med. Chron.,' November, 1889.

Grunert. "Beiträge zur Tuberkulose der Bindehaut," 'Archiv f. Augenheilk.,' Bd. xxxiv, Heft 1.

Hirschberg. "On Tuberculous Inflammation of the Eye," 'Trans. Internat. Med. Congress," 1881, vol. iii.

Knapp. "A Case of Tuberculosis of the Conjunctiva, &c.," 'Archiv. of Ophth.,' vol. xix, 1890.

Luc. "De la tuberculose de la conjonctive comparée au lupus de cette muqueuse," 'Thèse de Paris,' 1883.

Leidholt. 'Beiträge z. Casuistik der Augentuberkulose,' 1889.

Manz. "Zwei Fälle von Tuberkulose des menschlichen Auges," 'Zehender's Monatsbl.,' 1881.

Maren. 'Beiträge z. Lehre von Augentuberkulose,' Inaug. Dissert., Strasburg, 1884.

v. Milligan. "Ein Fall von Bindehaut-tuberkulose," 'Centralbl. f. prakt. Augenheilk.,' 1882.

Mules. "Tubercle of the Eye and its Appendages in Relation to General Infection," 'Ophthalmic Review,' vol. iv, 1885.

Muller. 'Ueber Tuberkulose der Augenbindehaut,' Inaug. Dissert., Tubingen, 1890.

Neupauer. 'Ueber die Tuberkulosis der Conjunctiva,' Szemeszet, No. 2, 1892.

Parinaud. "Tuberculose primitive de la conjonctive," 'Gaz. hebd. de Méd.,' vol. xxi, 1884.

Peck. "A Case of Conjunctival Lupus," 'Archiv. of Med.,' vol. iii, p. 333.

Pfeiffer. "Tuberkelbacillen in der lupös Erkrankten der Conjunctiva," 'Berlin. klin. Wochenschr.,' 1883, Bd. xx.

Rampoldi. "Granuloma ulcerato o tuberculosi di Congiuntiva," 'Ann. d'Ottal.,' vol. xv, 1886.

v. Reuss. "Ein Fall von Tuberkulose der Conjunctiva," 'Wiener med. Blätter,' Bd. x, 1887.

Rhein. "Ueber primäre Tuberkulose der Conjunctiva," 'Münchener med. Wochenschr.,' Bd. xxxiii, 1886.

Sattler. "Ueber die Behandlung der verschiedenen Formen der Konjunktival tuberkulose mit Tuberkulin,

&c.," 'Sitzungsber. d. Heidelberger Ophthalmol Versaml.,' 1891.

Stoelting. "Ueber der Tuberkulose der Conjunctiva," 'Gräfe's Archiv,' 1886, Bd. xxxii, Ab. 3.

Trousseau. "Inoculation du Lupus, &c.," 'Archiv. d'Ophth.,' November, 1889.

Ulrich. "Nachweiss der Tuberkelbacillen bei Conjunctival tuberkulose," 'Hirschberg's Centralbl.,' 1885, p. 359.

(*July 2nd*, 1897.)

II. DISEASES OF THE CORNEA.

1. *Note on the application of oxygen to suppurative conditions of the cornea.*

By Arthur Sandford, M.D.

At the request of Dr. George Stoker, who has been investigating the effects of the application of oxygen gas to wounds and chronic ulcers, I have for some little time been attempting to ascertain the effects of similar treatment in suppurative conditions of the cornea and conjunctiva, as well as in the auditory passages. As to the ultimate full value of this treatment in ophthalmic cases, the time has been too short and the cases too few to justify a definite opinion, but I have seen enough to make me very sanguine as to its usefulness. At present I shall only mention a few cases in order to indicate the class of affections in which I have observed marked improvement under this treatment. First, a young man aged 21 was suffering from superficial ulcerative keratitis, which had steadily extended over the cornea until four fifths of the surface was denuded, and this in spite of frequent and varied treatment, including the local application of antiseptic solutions. Considerable photophobia, frontal pain, and discharge were present. After several weeks of unavailing treatment I applied oxygen gas by means of a rubber cap adjusted over the eyes, and in twenty-four hours a very marked improvement in the patient's condition had taken place. Pain was relieved, ulcerative extension checked, the denuded surface had taken on a healthier appearance, and a healing process had apparently

set in. From that time the improvement has steadily continued, and the patient is now about to leave the hospital with excellent vision. Another case was one of corneal ulcer with hypopyon. In this case also the application of oxygen gas was attended with relief of pain and a healthier action in the cornea. This patient left the hospital during my absence, and I cannot, therefore, at present report further upon his condition. A third case was one of muco-purulent conjunctivitis. The patient, a girl, made an unusually rapid recovery under the oxygen treatment.

I need only now point out the obvious advantages associated with this system of treatment. In cases of photophobia accompanied by discharge the patient is able to keep his eyes open during the day, the light being excluded by the rubber cap, and free exit is thereby procured for pent-up discharges, whilst the eyeball is kept *continuously* in a pure atmosphere, which has been proved to be inimical to noxious germs and favorable to the healing process. The importance of this in hospital cases is not easily exaggerated. The apparatus is extremely light and portable, enabling the patient to move about during the daytime when desirable whilst undergoing treatment.

If some of those present will give this mode of treatment a fair trial and record their experiences, favorable or otherwise, my object in bringing forward the subject thus early will be gained.

(*October* 15*th*, 1896.)

The PRESIDENT asked whether any other treatment had been tried concurrently with the oxygen.

Mr. TREACHER COLLINS said a case of his had been treated by this method. A patient from the Belgrave Children's Hospital, who had a phlyctenular ulcer of the cornea which had not improved under ordinary treatment for a fortnight, was sent to Dr. Stoker, who took the child into his home, and treated the case in the manner which had

been described by Dr. Sandford. A rapid recovery ensued; he was not prepared to say how far the recovery was attributable to the good food at the home, the exclusion of light, or the application of the oxygen.

Dr. Sandford replied that no other treatment had been tried at the same time as the oxygen, as the application at present was purely experimental; but he quite believed that other agents might prove useful adjuncts when the value of the oxygen treatment had been thoroughly investigated.

Dr. Sandford exhibited the apparatus employed.* A bag holding 1 cubic foot was filled from a cylinder of condensed oxygen, and that quantity was sufficient for twelve hours. The bag communicated with a rubber cap fitted over the eyes fairly closely, excluding the light and most of the air, and fastened by a strap. The oxygen could be applied either pure, or diluted in various degrees with air. He kept the apparatus to the eyes for twelve hours continuously, and removed it when the patient went to sleep. The *modus operandi* in general surgery had been fully described by the originator (Dr. Stoker) at the meeting of the British Medical Association held at Carlisle last August.

---

2. *Ulcer of cornea with extensive purulent infiltration; treatment with oxygen only; recovery.*

By E. Treacher Collins and George Stoker.

Thomas H—, æt. 52, was admitted to the Moorfields Hospital on November 1st, 1896. Ten days previously he had been struck on his right eye by a chip of wood; he took no notice of this at the time, but a week later the eye became very painful.

* Supplied by Mr. Fellows, 49, Hertford Street, W.

On admission it was noted that the lids of his right eye were œdematous, and that there was inflammation and great œdema of the conjunctiva.

There was an extensive yellow ulcer involving the central and lower part of the cornea, also a large hypopyon. The iris was discoloured, and there was some lymph in the pupil, which was semi-dilated. The tension was normal.

He was treated for six days with hot bathing and atropine, when it was noted "ulcer cleaner, hypopyon less; there is much yellow infiltration in the substance of the cornea, and much conjunctival œdema."

He was then on November 7th transferred to Dr. Stoker's Home in St. George's Square, where he was treated with oxygen gas, the hot bathing and atropine being discontinued. On November 10th the infiltration of the cornea was decidedly less, and instead of being yellow was grey in colour; the hypopyon had almost disappeared, and the ulcer was healing, its edges becoming rounded.

On November 17th the ulcer was almost entirely healed; the grey infiltration around it was less, but there was still considerable injection and œdema of the conjunctiva.

On December 3rd the ulcer was quite healed, and the injection and œdema were much less.

The patient's vision, which was at first much impaired owing to the extension of the infiltration in front of the pupil, had greatly improved.

(*Card specimen. December 10th*, 1896.)

Dr. George Stoker exhibited the apparatus by means of which he treated the patient, and described the method of application. The reservoir contained half a cubic foot of oxygen and the same quantity of purified air, pure oxygen being too stimulating for acute affections. The eye-piece was worn for many hours continuously. With the exception of washing the part with boiled water occasionally, no other treatment was adopted. In the case

described by Mr. Collins the patient was free from pain twenty-four hours after the commencement of the application, and his sight was now fairly good. The bacteriological results of the case coincided with the hundreds of others which had been collected in connection with ulcers on other parts of the body, namely, in the disappearance of the unfavorable bacteria. He was anxious to continue treatment of the present patient, to see how far it would decrease the present opacity. Chronic cases could be treated with pure oxygen. A cubic foot—sufficient for twenty-four hours—only cost $2\frac{1}{2}$d.

---

3. *Results of operations for conical cornea.*

By R. W. Doyne.

Fred. B—, æt. 26. When first seen in 1889, R. well-marked conical cornea; L. extreme conical cornea (read J. 20 only). During the following two years the left cornea was cauterised three times, and the right cornea once; later an optical iridectomy was done on each eye.

Now $\begin{cases} \text{R. V.} = \text{J. 1 at 8}'', \bar{c} - 2{\cdot}5 \text{ sph.} = \frac{6}{18} \text{ partly.} \\ \text{L. V.} = \text{J. 1 at 4}'', \text{ still highly myopic.} \end{cases}$

The case was shown because it was a remarkable instance of the way in which a cornea might clear after cauterisation. The galvano-cautery had been used three times over a considerable area and to a considerable depth, and the patient now had a very faint nebula on the centre of each cornea. Iridectomy had also been done. Vision was very deficient, but had improved from J. 20 to J. 1.

(*Card specimen. May 6th*, 1897.)

III. DISEASES OF THE IRIS AND CILIARY BODY.

1. *Sarcoma of the iris.*

By C. Devereux Marshall.

George L—, æt. 21, factory hand, was admitted into Moorfields Hospital on January 30th, 1897, with the following history. Both eyes were quite healthy and equally good until November, 1896 (three months before he was seen). During this time the right eye was bloodshot, and has failed gradually but without pain. The day before admission the eye became acutely painful, and what little sight was left disappeared.

The only injury he remembers was a blow which the eye received three years ago, but the sight was in no way affected thereby.

The general health has always been excellent, and there is no specific history whatever. The left eye shows no sign of past iritis.

The condition of the eye on admission was as follows:

Cornea hazy, anterior chamber almost obliterated, iris bulged forwards. Some opaque matter in pupil. T. + 2. Patient was at once admitted and ether given. An iridectomy was performed, and then a large opaque mass looking like the lens presented itself. It was found impossible to remove this, and during the attempt some clear lens matter escaped. The eye was then excised.

The eye was immediately opened by an antero-posterior incision.

Occupying the normal situation of the lens is a solid unpigmented tumour, measuring 6 mm. by 4 mm., and

immediately behind this is some clear lens matter, which has evidently been pushed backwards by the growth.

Microscopic examination.—At the corneo-scleral junction on one side is the iridectomy wound, the iris having been removed on this side. From the posterior surface of the iris on the other side the tumour arises. It touches the ciliary body, but is not actually growing from it. Lying in contact with the posterior part of the tumour is some lens matter.

The growth is composed of mixed small round and spindle cells, with a delicate connective-tissue ground substance. It is extremely vascular, but the vessel walls are not very well formed. There are no inflammatory changes about the ciliary body, though in the part next the tumour it shows slight changes due to pressure. The other parts of the eye are healthy and normal in appearance.

The growth is entirely unpigmented, though the iris pigment is visible near its origin, but shows no proliferation.

Sarcoma of the iris is a very rare disease.

There are at present records of twenty-two cases; in eleven of these the growth was pigmented and in eleven unpigmented.

(*Card specimen. May 6th,* 1897.)

---

2. *Tubercular disease of iris and ciliary body.*

By W. T. Holmes Spicer and C. Devereux Marshall.

Nellie R—, æt. 10 months, came to the Victoria Hospital on March 23rd, 1897. The history was that the left eye had been inflamed about three months; it began

with the appearance of a small speck in the eye. The child had always had good health except for a slight attack of thrush, with constipation for a short time. Had been always nursed at the breast. The mother is healthy, but is very young, thin and poorly nourished; five months ago her husband was out of work, and there was not enough food. She was married at seventeen; the first pregnancy terminated in a miscarriage; the patient is the only living child. There is no family history of tubercle.

Present condition.—The child is fairly well nourished, but very fretful and ill. There is a nodular cheesy-looking mass in the anterior chamber growing from the anterior surface of the iris at its upper and outer part, encroaching on the pupil, and at one part pressing against the cornea; for the most part it is of a light pink-grey colour. The globe is intensely congested with greatly enlarged blood-vessels. Tension not made out; the eye is very tender.

April 5th.—The growth has increased to a marked degree; the anterior chamber is completely filled at its upper part by the growth, which is pressed flat against the cornea; the ciliary region is bulging, and the growth appears on the surface beneath the conjunctiva; the whole cornea appears hazy, and the outline of the pupil can scarcely be made out. The eye was excised. The child's health improved markedly after the operation.

Description of specimen.—The anterior chamber is almost filled with cheesy material, which extends into it from a mass growing from the ciliary region on one side. The sclerotic opposite this has been perforated, and the iris is prolapsed into the bulging staphylomatous mass. The lens is *in situ*. The retina is slightly detached everywhere except at the optic disc and ora serrata. No tubercles are seen in the choroid.

Microscopic examination.—There is a large cell-deposit in the anterior chamber and on the back of the cornea, apparently having its origin in the substance of the iris. The growth has a typical tubercular structure, and

contains numerous well-formed giant-cells. The iris on the opposite side shows several well-marked tubercular nodules.

(Card specimen. July 2nd, 1897.)

IV. DISEASES AND INJURIES OF THE CRYSTALLINE LENS.

Spontaneous dislocation of lens in its capsule into the anterior chamber.

By Thomas H. Bickerton.

Case 1. *Spontaneous (?) complete dislocation of lens in its capsule into the anterior chamber.*—Catherine D—, æt. 65, illiterate.

History.—R. E.: the right eye was enucleated more than twenty-five years ago, for rupture of the globe due to a blow from her husband's fist.

L. E.: on Saturday, October 3rd, 1896, she did two hours' sewing, the sight of the left eye being as good as usual. A glass for near work had only been worn for two years. On Sunday afternoon, October 4th, between 3 and 4 o'clock, while walking downstairs she was seized with sudden giddiness, sat down, and found herself blind. She called to her daughter to come to her assistance, who, at her request, led her to the front door, in order to try if she could see the sky. On looking out the sky appeared a dull red. She put her hand to her head, and in a moment or two after, on looking up again she could see nothing, but before quite losing all sight she "saw a glimmer of light out of the left corner." This was the last to go, and she has not seen since. Advice was not sought for seventeen days, the patient thinking each day that the blindness would pass off.

Absence of traumatism.—The patient declares positively that there had been no previous injury to the eye, either recent or remote.

Habits.—She asserts positively that she has been a teetotaler for many years, being too poor to indulge.

Condition on admission.—Vision *nil.* Tension stony hard. Ocular congestion absent. Cornea clear. Anterior chamber occupied by the complete lens, which was undergoing irregular cataractous changes. Lens, general haziness, with an opaque margin and more opaque intersecting striæ. The *iris* and *pupil* were not visible. Behind the upper corneo-scleral junction there was a distinct slightly bulging curved black line, running parallel to the corneal margin.

Operation.—The ordinary cataract section was made, and the lens in its capsule delivered entire by the vectis, a very slight escape of vitreous following. It was then seen that there was a deficiency in the iris at its upper part. Healing was uninterrupted, but vision remained *nil.*

Remarks.—Simple traumatic dislocations of the complete lens into the anterior chamber, without injury to the iris, are rare. Cases are met with where congenitally dislocated lenses may slip through the pupil into the anterior chamber, but in these cases the lenses are small and ill-developed. This lens was a large one, completely filled the anterior chamber, and it is difficult, in the absence of traumatism, to account for the occurrence.

I believe, in spite of the denial of such, the probable explanation to be that there had been injury to the eye years ago, slight rupture at the upper corneo-scleral margin with prolapse of the iris, causing a large coloboma, through which the lens had now escaped. Whether the lenticular changes were prior to or the result of the dislocation is doubtful, seeing that a presbyopic glass was not used by the patient until attaining the age of sixty-three years.

Case 2. *Spontaneous complete dislocation of lens in its capsule into the anterior chamber, through coloboma made preliminary to cataract extraction.*—Wilson S—, æt. 66, tailor.

Previous history.—L. E.: on November 24th, 1891, the combined cataract operation was performed.

R. E.: on same date a preliminary iridectomy upwards was performed. The resulting vision (left eye) was so satisfactory—V. = $\bar{c}$ + 11 D. $\frac{6}{6}$ (six letters), and $\bar{c}$ + 15 J. 1 easily—that the patient never returned to hospital to have the right lens extracted. On March 11th, 1897, seven years and four months after the preliminary iridectomy, on coming down to breakfast his wife remarked, "What's to do with your eye?" "Nothing, so far as I know," was the reply, but on going to the mirror patient saw that his right eye was "ashy white" in colour. The next day the eye was slightly painful and red, and it slowly became more painful and red until his visit to hospital on March 19th, the day of admission.

Absence of traumatism.—Patient states that he received no injury, and that he slept quietly as usual the night prior to the condition being noticed.

Condition on admission.—Vision, doubtful perception of light. Tension + 3. Ocular congestion marked. Cornea clear. Anterior chamber occupied by the complete lens in its dense white capsule. Lens hypermature (Morgagnian), the dark amber-coloured nucleus moving freely about in fluid cortex in accordance with position of patient, and disappearing from view when the dorsal position was assumed. The *iris* and *pupil* could not be seen.

Operation.—On March 19th, 1897 (day of admission), a large corneal section was made. In transfixing the cornea the point of the knife hitched in the capsule, causing it to revolve easily on its antero-posterior axis. In delivery by vectis the capsule ruptured, a milky white fluid escaping, and the nucleus was then lifted out. Loss of vitreous was very slight. The nucleus was dark amber in colour, elastic, measuring 3 mm. in diameter, 1·5 mm. in thickness, while the posterior curvature was 1 mm., and the anterior 0·5 mm.

Progress.—On the second day after operation he had

an acute attack of rheumatism, with delirium supervening on the fifth day, and lasting three days, but the wound made an uninterrupted recovery.

On April 12th, 1897 (twenty-three days after operation) he could count fingers correctly, and tell the front from the back of a watch.

On June 8th, 1897 (eighty-one days after operation), vision had improved to $\bar{c} + 11$ D. $\frac{6}{36}$, and $\bar{c} + 16$ D. J. 6. A fragment of capsule interferes with an otherwise clear pupil. Tension normal.

Remarks.—(*a*) The above cases suggest an additional reason for making a small preliminary iridectomy for subsequent cataract extraction. Hitherto it has been my custom to make a fairly large one.

(*b*) A high glaucomatous tension lasting eight days, with total blindness, may be compatible with almost complete recovery of central vision.

(*July 2nd*, 1897.)

V. DISEASES OF THE RETINA, CHOROID, AND VITREOUS.

1. *A case of spontaneous recovery of a retinal detachment.*

By R. Lawford Knaggs.

C. G—, æt. 21, was shot by her husband on May 21st, 1892. The bullet penetrated the right temple above the zygoma, and passed through the right superior maxilla, across the nasal fossæ, and probably lodged in the left antrum close to the roots of the bicuspid teeth. The probe showed that this was the general direction of the track, but corroboration was derived from (1) the numbness of the skin of the right cheek supplied by the infra-orbital branches of second division of the fifth nerve, and (2) by a tender puffy swelling close to the alveolar border of the hard palate on the left side.

The wound gave no trouble, and was healed in a few days. The numbness persists to the present time, and the two bicuspids close to the puffy swelling have rotted completely away. But the special interest of the case lies in the changes set up in the fundus of the right eye by the concussion, which progressed over a period of many months.

I was asked to see the patient on May 22nd by my father, under whose care she was admitted into the Huddersfield Infirmary, and I have had opportunities of observing the case up to the present time through the kindness of Mr. Clifford Baldwin of Lockwood.

Attention had been directed to the right eye because the patient complained that she could not see objects in

the central and upper portions of the field. The pupils were equal, and contracted to light. Ophthalmoscopic examination of the right eye showed two choroidal ruptures, one above and the other below the macula, having a direction almost parallel to the bullet track, and with no tendency to a concentric arrangement. The upper one extended through the internal layers of the choroid only, and the sclerotic was not visible; the lower one was obscured by the hæmorrhage due to it, and its real character was not detected till a few days had elapsed and the blood had become partly absorbed. There was œdema of the retina at the macula, which showed as a cherry-red spot, and near the periphery in the lower hemisphere were five or six very large hæmorrhages superficial to the retinal vessels. On May 29th the œdema had cleared away, leaving four or five white lines radiating from the cherry-red spot, which was now five or six times as large as at first, and in depth of colour was suggestive of a large circular hæmorrhage. By June 1st the appearances had undergone a considerable change. The large hæmorrhages were rapidly disappearing, and portions of clot could be seen floating into the vitreous. The macular region was grey and swollen, and above it were numerous pigment patches extending to the nasal side of the disc, the edge of which was blurred.

A fortnight later, after active treatment by leeching, atropine drops, and the biniodide of mercury, the appearances were rather more defined. Reaching from the upper choroidal rent was a raised, irregular, ill-defined pale grey patch, involving the macula and its vicinity. At two places vessels entered this patch on the temporal side, and their tortuosities showed the irregularity of the surface, whilst in a portion of their course they were completely buried. One could be traced as a thin line to a vessel near the disc; the continuation of the lower one had to be imagined. There was a small hæmorrhage on the surface near the spot where the upper vessel was lost. The boundary of the disturbance was sharply marked

above by a linear disposition of pigment patches and granules. The edge of the disc was blurred on the macular but defined on the nasal side, where the choroid was rumpled.

At this time the patient went home to be confined, and when next seen in July I thought that the inflammatory condition had come to an end. There was then a somewhat rectangular-shaped dead white mass of lymph occupying the central region, and evidently coming some distance forwards from the retina; behind this and extending beyond it almost all round was a great quantity of black pigment, and a process that jutted upwards from it marked the site of the upper choroidal rupture. Several vessels entered the mass on the temporal side, showing tortuosities and bends as they did so; they were superficial to the pigment layer, but were completely overlaid by the mass of white lymph; their continuations were not easily seen, in consequence, probably, partly of diminished calibre, and partly of some slight retinal œdema still persisting between the central region and the disc. But on July 27th I was astonished to find a considerable detachment of the retina of a very interesting character. Seen from the front it presented a triangular elevation like a wedge of cheese, with the apex above and the base resting on the floor of the globe. With a little management a view of its temporal side could be obtained. The detachment reached too far forward for the base at its anterior part to be seen, but its sides were steep, and at the floor passed at once into the properly applied retina. Looked at from above, the apex formed a ridge which ran almost horizontally backwards, and then, rising gently, became lost in a track which descended vertically from behind the large white patch of lymph over the macular region, but in front of the deposit of pigment. An undulating vessel followed the inequalities of the surface of the temporal side. The detachment was of the usual white colour, but not so brilliantly white as the central lymph patch. On

FIG 1.

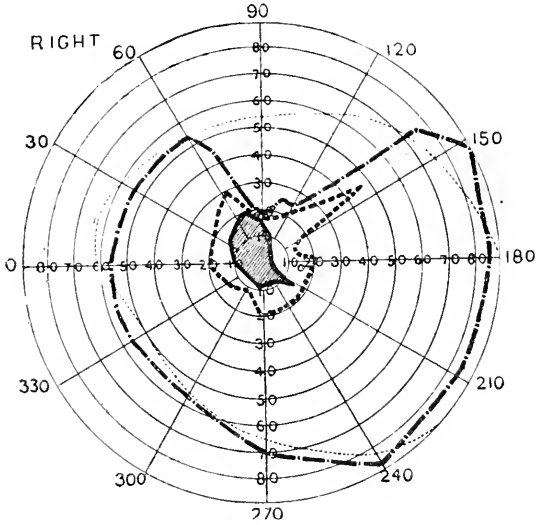

July 30th, 1892. Shaded area = absolute scotoma. Dotted outline = relative scotoma.

FIG 2.

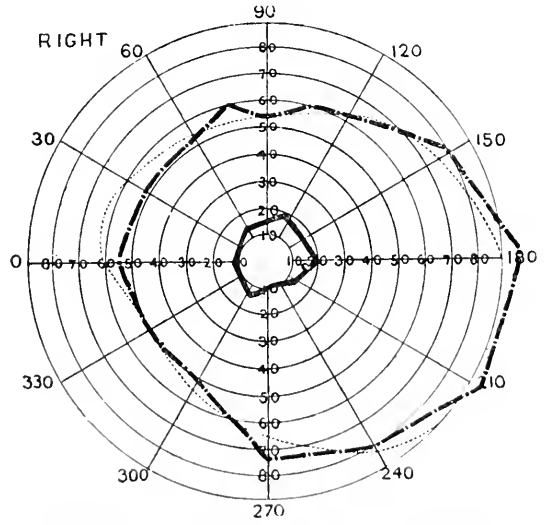

November 28th, 1893. Central absolute scotoma.

July 30th I was able to get a sketch of it, and took a field (Fig. 1) which showed a central scotoma corresponding in appearance to the central lesion in the fundus, and a further wedge-shaped deficiency (whose apex joined the central scotoma) in the upper part, due to the detachment.

I saw nothing more of my patient till November 28th, 1893, when she came to consult me about an attack, probably of a neurotic nature, in which the sight of the other eye had been momentarily affected. On examining the right eye I found there had been further changes. The central patch of lymph had somewhat altered in shape. It was now triangular with its apex below, and a long streamer passed from it to be attached to the macular side of the disc, evidently some little distance in front of the retina. The lymph looked like fine combed-out cotton wool; the underlying pigment formed a broad frame to the white patch, and the former relations of the vessels were more easily seen and their continuations traced. Much of the pigment in the upper part of the fundus had disappeared, and generally there was more distinctness of detail. But the detachment of the retina seemed completely to have disappeared. The track which had led down to it from the central disturbance was still there, but in place of the detachment the retina was absolutely normal in appearance, and the only traces that could be found anywhere in the whole fundus were two or three very small white patches like little blisters, situated at the extreme periphery on the floor of the eye, probably close to the ora serrata. They could only be seen with great difficulty.

The field of vision taken at the same time (Fig. 2) was perfectly normal in shape and size except for a small absolute central scotoma. The gap produced by the detachment had disappeared, and the size of the central scotoma had greatly diminished.

The condition was unaltered at the beginning of 1895, when the patient was last seen.

The explanation of the origin of the detachment in this case is probably very simple. An extensive mass of inflammatory exudation had formed at the posterior pole in consequence of a choroiditis started by the concussion. The violence of the injury was evidenced by the two ruptures in the choroid. After two months, when active inflammation seemed to have subsided, the detachment made its appearance. It is impossible to be sure whether this was due simply to the gravitation of fluid which had produced a concealed detachment behind the large mass of lymph overspreading the macular region, or whether it originated by the gravitation of inflammatory fluid which was expressed by the contraction of the organised lymph. Nor does it matter much. The point of importance is that the detachment was produced by inflammatory serum, whose natural tendency would be towards absorption, and consequently it differed essentially from a detachment where the subjacent fluid is a passive effusion filling a potential vacuum.

A study of such cases as I have been able to find sufficiently recorded in the limited resources at my disposal shows three distinct groups.

1. One in which the detachment occurs in fairly healthy eyes as a result of some form of concussion, such as a blow or coughing.

2. Another where it is the direct result of inflammatory effusion dependent upon severe traumatism, or some organic disease.

3. A third where the eyes in which the detachments occur are the subject of some chronic disease—such as myopia; and in these degenerative and possibly inflammatory changes may share in producing the condition.

Clearly in groups 1 and 2 spontaneous recovery is more probable than in group 3, and the prognosis from the point of view of treatment, whether medical or surgical, more hopeful.

Dr. Brailey's case, George Robinson, recorded on

p. 113, vol. v, of the 'Ophthalmological Society's Transactions,' is an instance of spontaneous recovery belonging to group 1; whilst the case of Thomas S—, in the same paper, belongs to the same group, and is an example of benefit resulting from operative treatment.

The case just narrated belongs to the second group, and I have met with several abstracts pointing to spontaneous recovery from somewhat similar conditions, the most remarkable being recorded by J. H. Thompson.

In a man æt. 25, whose R. eye had been removed, the sclera of the L. eye was perforated by a pellet wound which healed. Three or four weeks later a detachment began to form over the site of the wound, and eight weeks after the injury he was blind, and the folds of the retina were close to the posterior surface of the lens. A year later the retina was found to have reapplied itself, the only abnormality being marked choroidal changes and the remains of a detachment in the neighbourhood of the original wound. Vision was slow to return, but four months later he could read street signs and recognise friends (Knapp's 'Archives of Ophthalmology,' vol. xix, p. 47).

In vols. i and viii of the 'Transactions' several cases of detachment occurring as a result of renal retinitis are recorded, but in none did the detachment become reapplied, and most of them were rapidly fatal.

But a case of spontaneous recovery within a few days after premature delivery is recorded by Adamuk, where binocular detachment had occurred during severe eclamptic attacks in the eighth month of pregnancy. Though nothing is said (in the abstract) of the absence or existence of retinitis, the possibility that such a condition was present induces me to mention this case in connection with group 2 (Knapp's 'Archives,' vol. xx, p. 457).

Group 3 probably includes the large majority of all cases of detached retina met with in practice. Though recovery without as well as after operation apparently

does occasionally take place, it has only fallen to me to meet with the very partial improvement which sometimes follows the shifting of the detachment from gravitation.

My belief in the much greater hopefulness of groups 1 and 2 has been increased by the examination of such records as I have come across, but they are of a too fragmentary or too comprehensive a character to permit of proper analysis.

Spontaneous recovery of detached retina is, however, so rare that I need offer no excuse for bringing this case to the notice of the Society.

(*January 28th*, 1897.)

Mr. CANT mentioned a case in which a certain amount of absorption had taken place. The patient's age was twenty-four, and he was struck in the eye by a tennis ball. He had retinal detachment for six years, during which time a pad was constantly applied with pressure when in bed. The patient had been kept lying in bed about ten days out of twenty during first half, and ten days out of thirty during second half of the time. The bandages had now been left off three or four months without any relapse occurring, and he had hopes that the improvement would be permanent. The eye was myopic, but was otherwise healthy. It would come under Dr. Knaggs' class 1.

2. *Detachment of retina; choroidal atrophy.*

By A. QUARRY SILCOCK.

(Plate II, fig. 2.)

I BRING this case before the Society because the pathology of the detachment is to me, and to others who have seen it, very obscure.

The condition of things as first observed (May, 1896) is indicated in the coloured sketch (Plate II, fig. 2).

It was thought a tumour might exist beneath the detachment. To settle this point the patient was anæsthetised, and the globe being fixed by an assistant, I plunged a needle through the sclerotic behind the ciliary processes, and holding it in my right hand I could observe the position of its point with the ophthalmoscope. By its means I was able to tear through the retina at the summit of the detachment without inducing any hæmorrhage. The moment I had done this I saw a red reflex, presumably choroidal, and a great deal of subretinal fluid escaped. I therefore assumed that no tumour was present beneath the main part of the retinal detachment.

The present condition is as follows:—The right retina is now largely detached except in the upper and inner quadrants. In these regions there are well-marked areas of atrophic choroid, surrounded and flecked by pigment masses. Peripherally and above are two fan-shaped detachments, the detached retina being opaque, white, and papery in appearance; one of these is in the course of the upper nasal vessels, the other in that of a small branch of the upper temporal. The main retinal detachment overlaps the O. D. except the inner edge of the latter. It projects forward as a rounded elevation, the apex of which is best seen with + 8 to + 10. The O. D. is apparently widely and deeply cupped, its vessels appearing to bend sharply over its inner edge. A white irregularly linear scar can be seen in the detached retina outside the O. D. in the horizontal diameter of the globe, the result of the incision above mentioned.

T. n. V. = hand reflex.

The boy affirms that the left eye has been blind as long as he can remember. There is no history of trauma or of syphilis.

(*Card specimen. December 10th*, 1896.)

PLATE II.

Fig. 1.—Drawing of the left eye in Mr. Juler's case of Retinal Pigmentation (p. 50).

Fig. 2.—Ophthalmoscopic appearances in Mr. Silcock's case of Detachment of Retina (p. 45).

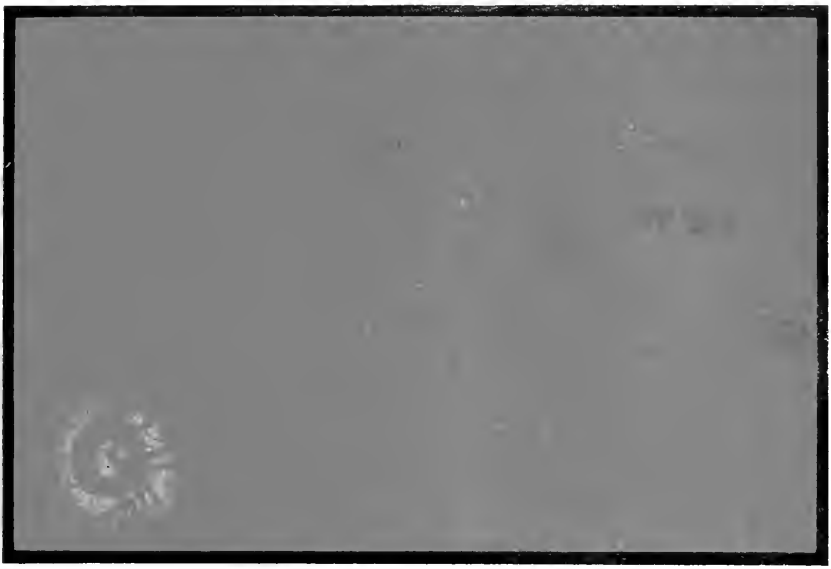

M. Taylor, del.

Fig. I.

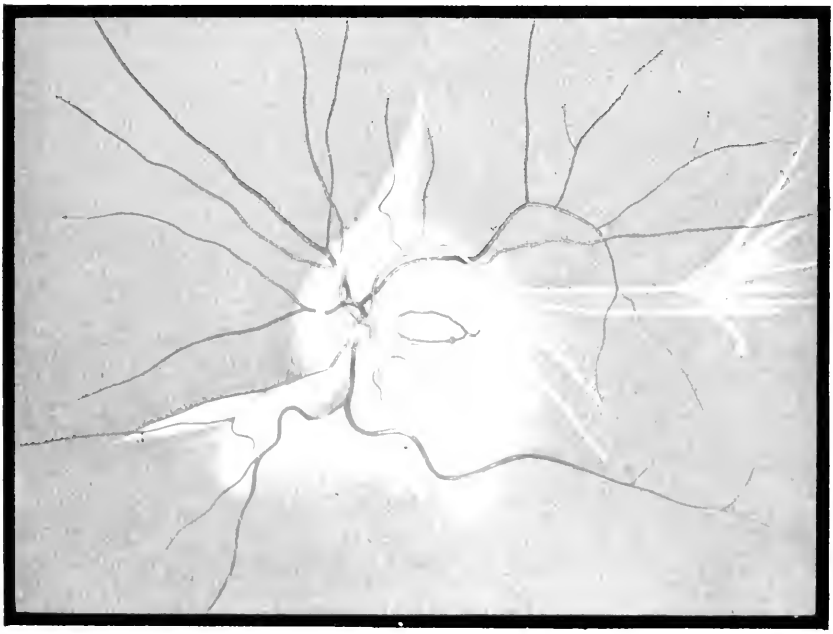

Fig. II.

Bale & Danielsson, Chromo-Lith.

P.S. (June 27th, 1897).—The patient was seen a fortnight ago (he has been under constant observation since he was discharged from the hospital); there was then no material change in the ophthalmoscopic appearances of the affected eye, nor in respect of its tension or vision.

Mr. Holmes Spicer said the appearances in part were very much like retinitis proliferans, but the central portion was much deeper and rounder than in that disease. It looked as though it were thrust forward by some round mass, such as a cysticercus, although there was nothing indicative of a head in it.

---

3. *Specimens of* Y*-shaped detachment of the retina.*

By Ernest Clarke.

1. George D—, æt. 10 years. Sight failing six months before admission. No history of injury, syphilis, or fits. Cataract of left eye. No perception of light, no tension, no pain. Cataract needled. Eye removed two months later.

Eye shows cystic changes in retina, which is attached to papilla behind, and forming a central pillar, unites anteriorly with mass of fibrous tissue, the sequel of extensive cyclitis.

2. Thomas G—, æt. 12 years. Right eye received blow from snowball four years previously. Sight gradually failing, worse lately. Bare perception of light, no increased tension, no pain. Lens opaque. Cataract needled.

Eye shows a well-marked Y-shaped detachment of retina, with considerable thickening and cystic changes. Extensive cyclitis.

3. Man æt. 60. Twenty years previously left eye had been injured by a blow, and sight with it had been lost. The cornea was opaque, there was no anterior chamber, the lens was dislocated upwards, and in contact with

posterior surface of cornea. Slight perception of light, slight increased tension, eye very painful.

Eye shows Y-shaped detachment of retina, with considerable thickening and cystic change. Large recent hæmorrhage seen in fork of Y. Extensive cyclitis and some choroiditis.

In both 1 and 2 the needling was performed to establish a diagnosis, and in each case the appearance was so suspicious of glioma that the eye was removed.

In 1 the cyclitis and consequent detachment occurred in early life, perhaps before birth, and was probably syphilitic in origin.

In 2 and 3 the cyclitis was traumatic, and in 3 the old-standing trouble remained dormant for years.

The specimens were mounted in glycerine jelly.

(*Card specimen. May 6th,* 1897.)

---

4. *Two brothers with symmetrical disease of the macula, commencing at the age of fourteen.*

By Rayner D. Batten.

Harry S—, æt. 14.

Ophthalmoscopic examination.—In both eyes at the macula there is a dark, pear-shaped patch of a red colour, dotted over with fine points of retinal pigment. Surrounding the macula there is an area of retinal disturbance. dotted over with ill-defined yellowish-white dots.

V. $\begin{cases} \text{R.} = \frac{6}{60}, \text{ J. 8 at 7 in.} \quad \begin{matrix} + 3{\cdot}5 \\ + 1 \end{matrix} \\ \text{L.} = \frac{6}{60}, \text{ J. 4 at 7 in.} \quad \begin{matrix} + 2{\cdot}25 \\ + 2{\cdot}25. \end{matrix} \end{cases}$ Vision not materially improved by correction.

Visual fields show no contraction. There is no definite scotoma, but slight confusion of colour vision in a very small central area.

Fred. S—, æt. 21. The changes are more advanced than in his brother's case. There is some fine choroido-retinal change occupying the whole of the macular region, forming an ill-defined area, with a small central deposit of fine dotted pigment, somewhat resembling in shape the patch in his brother's eye. There is a good deal more pigmentary change in the whole area than in his brother's. There are a few superficial spots of retinal pigment towards the periphery, but there is no definite choroiditis or other change.

V. $\begin{cases} \text{R.} < \frac{6}{60} - 1{\cdot}5 = \frac{6}{36}, \text{ 1 letter.} \\ \text{L.} < \frac{6}{60} - 1{\cdot}5 = \frac{6}{36}, \text{ 1 letter.} \end{cases}$

Visual fields not taken.

The chief points of interest in the case of these two brothers are—

1. The failure of vision occurred at about the same age (viz. fourteen) in each of them. The onset was more or less gradual (some months).

2. The changes are symmetrical in each case.

3. The condition of the fundus in the elder brother probably represents a later stage of the condition now commencing in his brother's eye.

4. There is a definite history of syphilis in the parents, and from the family history the patients are probably the subjects of hereditary syphilis, though they show no definite signs of it.

The younger brother's sight has improved whilst under treatment. V.: R. $= \frac{6}{24}$, L. $= \frac{6}{24}$.

The elder brother is not conscious of any change in his sight the last few years.

The father of the patients admitted syphilis. The mother was healthy before marriage, but had "disease" in early married life. The first three children were still-born; the first living child was the elder of the two patients; following him were two miscarriages; then a girl (living, and said to have "good sight"), then the younger of the two patients.

(*Card specimen. May 6th*, 1897.)

5. *Case of retinal pigmentation.*

By Henry Juler.

(Plate II, fig. 1.)

T. T—, æt. 46, carpenter, came to the Royal Westminster Ophthalmic Hospital in December, 1896, complaining of dimness of vision. The pupils were active and equal. Knee-jerks very brisk.

In the right eye he was at first thought to have slight neuro-retinitis, the edge of the disc appearing badly defined and the retina generally hazy. Under atropine, however, he was found to have compound hypermetropic astigmatism, vertical meridian = 3 D., horizontal meridian = 6·5 D. This would account for some indistinctness. The macula was not well defined, but presented nothing abnormal.

In the upper and inner quadrant of the retina were patches of pigment arranged as shown in the drawing; in many places these were sarciniform in appearance, They were mostly grouped along the course of the upper nasal vessels, the pigment in some places appearing to be superficial to the vessels, in others beneath them.

No evidence of choroidal or other pathological change was present.

V. R. $= \frac{6}{60}$ c $\frac{\text{sph.} + 2{\cdot}5}{\text{cyl.} + 4 \text{ ax. } 100^\circ} = \frac{6}{12}$ 2 letters.

In the left eye the general appearance was similar to that of the right. The refraction was about the same. There was, however, no pigment except in one spot near the inner periphery just below the horizontal meridian. Near this spot were observed two minute brightish woolly dots.

V. L. $= \frac{6}{36}$ c $\frac{\text{sph.} + 3}{\text{cyl.} + 3{\cdot}5 \text{ ax. } 100^\circ} = \frac{6}{12}$ 4 letters.

The visual fields were normal and colour vision perfect. The urine was normal.

Personal history.—Sight was never good. When at school he could not see to read very small print. He could read newspapers with difficulty, but only for short periods. His sight was never tested till now. He worked as a carpenter and painted fairly well, but not so well as other men. Six years ago his near vision began to get worse, and he is now hardly able to do any work. He is a non-smoker. Many years ago he had "jaundice." Has had three attacks of rheumatic fever. Never had influenza.

Family history.—Father died of bronchitis. Mother died of old age. One brother and two sisters "all have good sight."

Remarks.—The case appears to me to be one of defective vision due to uncorrected ametropia, whilst the pigmentation is accidental and of no pathological importance.

(*Card specimen. March 11th*, 1897.)

---

6. *A case of so-called "retinitis punctata albescens."*

By JOHN GRIFFITH.

A MAN, J. B—, æt. 48, a silversmith, attended my clinic yesterday at the Royal Westminster Ophthalmic Hospital complaining of night-blindness.

History.—"He had suffered from it all his life." He consulted Mr. Power twenty-five years ago, "who said he could do nothing for him." No history of venereal trouble.

Family history.—Parents were first cousins. His sister

suffers also from night-blindness. She has married her first cousin, and her son has splendid sight.

Present condition.—R. V. $= \frac{6}{36}$; L. V. $= \frac{6}{36}$, not materially improved by glasses. Has by Javal's ophthalmometer 0·5 D. astigmatism in each eye. Suffers from marked deficiency in his light sense. Visual fields normal for white, and for colours in good light, the slightest shadow reducing his colour field in a marked degree. No central or ring defect. Colour vision normal.

The *fundi* are similar in appearance. The disc is pale, and has a somewhat waxy hue; the margin gradually shades off into the colour of the rest of the fundus. Vessels slightly constricted. There is a general mottled condition of the whole fundus, but especially around the disc and macular region there is a ring area covered with discrete yellow spots resembling Tay's choroiditis.

Remarks.—I believe this to be a case of retinitis punctata albescens, as described first by Mooren. It is in my opinion a primary degeneration of the retina and choroid, allied to pigmentary degeneration of the retina (so-called retinitis pigmentosa), and not an inflammatory condition. It is either congenital or starts in infancy. It differs from the pigmentary form (*a*) in the absence of pigment, but the presence of white spots; (*b*) in the normal visual field. It resembles it (*a*) in this case in a family history of consanguinity, (*b*) in the existence of night-blindness, (*c*) and in certain appearances seen in the fundus oculi, viz. waxy pallor of the disc and narrowing of the vessels.

(*Card specimen. May 6th*, 1897.)

The PRESIDENT said that the particular point about these cases, as contrasted with ordinary retinitis pigmentosa, was that they seemed not to get worse, and the case shown to-night was important as bearing out this point. Recently he saw a lady about thirty years of age with the same condition, whom he had seen when she

was about twenty years of age, and she had become no worse.

Mr. Treacher Collins said that some six months ago he saw a young lady who came complaining of night-blindness, and whose fundus showed changes very similar to those in Mr. Griffith's patient. The white spots were rather smaller, and more like those in a case of Mr. Nettleship's pictured in the 'Transactions' of the Society, vol. viii, pl. vii, fig. 2. The case was remarkable because of a very strong family history of consanguinity. The parents were first cousins, so were the grandparents of both sides. The patient has eight brothers and one sister living; three brothers suffer from night-blindness.

---

7. *Case of retinal œdema with sudden failure of lower half of left visual field.*

By Henry Juler.

A. C—, a servant æt. 29, was brought to St. Mary's Hospital by Dr. R. Handfield-Jones on Friday, October 30th, 1896, with a history of sudden failure of the lower visual field of the left eye. On the previous Friday she found when she awoke that there was a fog below in the left eye. She was positive that the eye was all right the day before. Dr. R. Handfield-Jones states that there is no cardiac disease nor any other trouble, local or constitutional, beyond slight anæmia, that he can discover apart from the eye. She suffers occasionally from bilious attacks, and the morning she was at the hospital she twice vomited some bile.

The ophthalmoscope shows a greyish-white haze of the upper half of the retina, involving even the upper half of the disc. The pallor is most marked immediately above

the disc, fading away towards the periphery. The calibre of the upper nasal and temporal vessels, veins and arteries, is apparently normal. The upper margin of the disc is blurred and slightly swollen, but the lower half is natural. The vessels have a somewhat peculiar arrangement. There is no evidence of renal mischief.

V. = $\frac{6}{12}$. Field of vision lost in lower half.

The probable cause of this trouble is embolism of the central artery of the retina behind the lamina cribrosa, the arteries supplying the lower half of the retina in this case being probably cilio-retinal.

(*Card specimen. November 12th,* 1896.)

Mr. Priestley Smith, referring to Mr. Juler's case, said the suddenness suggested embolism, but was not incompatible with the idea of thrombosis, for cases were found in which blindness of that kind came on suddenly and then disappeared, and this was repeated several times. Such recovery and recurrence of course excluded embolism, and pointed rather to some fault in the artery itself. If the artery were unable to transmit the blood-stream in full force, a slight temporary embarrassment of the circulation might reduce the impulse so far as to bring the stream almost to a standstill, and the return of the vigour of the heart or the removal of the obstruction might re-establish the flow. It would be of interest to know whether, in the case under consideration, there had been any transient attacks of the same nature. If so, it would favour the idea of thrombosis.

Mr. Lawford mentioned a case of his own of a somewhat similar nature (see p. 55).

Mr. John Griffith said he had had opportunities of seeing Mr. Juler's case on more than one occasion, but he could not find any evidence of disease in the upper retinal arteries, either temporal or nasal, except the blurring caused by the œdema.

The President said that one point which both Mr. Juler's and Mr. Lawford's drawings illustrated was that

a conclusion could not very safely be drawn in the early stage of a case of the kind from the size of the artery in the affected area. It used to be taught that a case could not be embolism unless the arteries were thread-like, but it was now generally recognised that such was not the case.

Mr. R. Handfield-Jones said that in the case shown by Mr. Juler there was no temporary loss of sight at any time; that precluded heart failure as the cause, notwithstanding that the attack was very sudden.

---

8. *Embolism of lower division of central artery of retina.*

By J. B. Lawford.

Henry D—, æt. 37, milkman, a stoutly built healthy man; no recent illness. Three years ago (September, 1893) had "rheumatism," beginning with quinsy. His feet were swollen for one week. No history of syphilis. Married twelve years. Wife has had no pregnancies. No physical signs of disease in heart. Pulse 90, regular. Urine 1025, acid, no albumen, no sugar.

Left eye failed suddenly on October 11th, while stooping to lift a teapot from the hob. No pain at the time or since. Patient came to St. Thomas's Hospital on October 16th, stating that no alteration in the sight of his left eye had occurred since the failure. He said he could not see anything above the level of his eye. On examination, vision of left was less than $\frac{6}{60}$, and 20 J. barely, in lower part of field. Pupil active to light. T. n.

Ophth.—Media clear. The greater part of lower half of retina is whitish, œdematous, and very blurred, and partially obscures the arteries and veins; the arteries appear to be diminished in size, but this is difficult to decide. The upper margin of the hazy area, on temporal

side of disc, is irregular, very sharply defined, and extends obliquely downwards and outwards. The upper limit on nasal side is much less sharply defined. The œdematous area apparently does not include the macula, at the site of which is a dark patch, ? hæmorrhage; ? the cherry-red spot of embolism. The lower margin of the disc is hidden by whitish haze. The retina and vessels in the upper half show no indications of obstruction to the circulation.

Right eye presents no abnormal appearances.

The field of vision of the left eye, taken on the 17th October, shows an unexpected degree of contraction (Fig. 3), the upper half being entirely lost, and in addition the lower and outer part much contracted.

December 4th.—Patient has been seen at frequent intervals since his first attendance. The ophthalmoscopic appearances have undergone marked alteration. The haze of retina has almost completely disappeared, leaving a track of semi-opacity along the branches, especially the temporal branch, of the lower division of the central artery. This division of the artery is considerably narrowed in all its branches. The nasal branch shows irregularities in its calibre. There is a little haze and thickening about the vessels as they emerge from the optic disc. The lower and outer third of the optic papilla is now obviously pale. The field of vision taken on November 20th (Fig. 4) shows a horizontal hemianopia. Patient can read $\frac{6}{12}$ partly with the left eye.

The chief point of interest in this case concerns the field of vision. The loss of a large portion of the lower half of the field was quite unexpected, and was not explained by the visible changes in the retina. The field, mapped out five and a half weeks after the embolism occurred, showed exactly what I expected to find on the previous occasion. The loss of function in the upper part of the retina was temporary.

The explanations which may be offered for these conditions are, I think, two. 1. That an obstruction, pro-

FIG. 3.

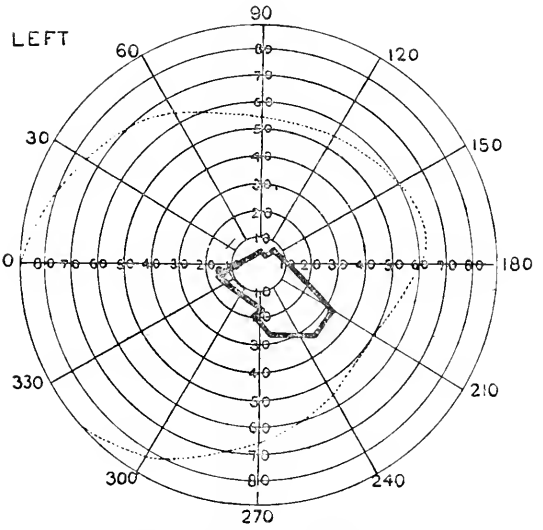

Field of vision, Oct. 17th, 1896. 10 mm. test.

FIG. 4.

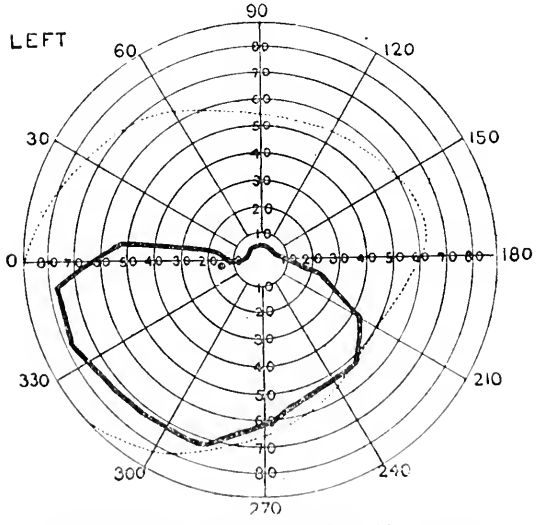

Field of vision, Nov. 20th, 1896. 10 mm. test.

bably embolic, occurred just at the division of the *arteria centralis* into its two main branches, almost completely blocking the lower branch, and interfering with the blood-stream in the upper division sufficiently to temporarily place the retinal functions in abeyance, but not sufficiently to lead to œdema or other visible change in the retina. 2. That an obstruction of the lower main branch of the central artery so far disturbed the circulation throughout the retina as to interfere for a time with the function of the peripheral parts of the retina supplied by vessels which were not blocked.

The amount of œdema and haze of the retina were unusual, and the sharply defined upward limit of the cloudy part was very striking.

(*Card specimen. December 10th*, 1896.)

9. *Bilateral spontaneous hæmorrhage (?) into the vitreous.*

By R. D. Batten.

The patient was a healthy young man, in whom vision had suddenly failed, with obscuration of fundi. The man's age was twenty-six, and his occupation that of labourer. In July last, while working in the hay-field, he suddenly felt giddy while stooping down; his sight, which formerly was good, became misty and then failed. When seen two weeks after the occurrence he had only perception of light. The pupils were equal, and reacted to light.

Ophthalmoscopically no view of the fundus in the right eye was obtainable, and only a faint reflex, and that of a light greyish colour. In the right eye there was some reflex in parts. There was great haze in the vitreous, some floating opacities could be detected, as well as one or two large, irregular-shaped white

patches. The colour of the reflex did not suggest hæmorrhage into the vitreous. No detachment of the retina could be made out. The media had gradually cleared, and not until to-day could any definite details of the fundus be seen. In the right eye, extending through the macular region, was a large white patch, and at the periphery were some others which Mr. Batten was inclined to regard as choroidal, but those towards the outer side were likely to be deep retinal. In the left eye were one or two white patches with a retinal vessel running through them. The patient denied syphilis, and there was nothing in his general condition to suggest it. Heart and chest were normal, bowels regular, no history of epistaxis. The chief point of interest was the sudden and simultaneous failure of vision in both eyes, the cause of which Mr. Batten supposed to be hæmorrhage, though when he presented himself no hæmorrhage was evident from the reflex. Doubtless the act of stooping caused venous congestion.

Vision to-day (December 10th), R. $\frac{6}{36}$; L. $\frac{1}{60}$.

In reply to the President, Mr. Batten said he would class it in the group of large spontaneous hæmorrhages into the vitreous. The attack occurred on a hot day just after dinner. The man was practically a teetotaler.

July 2nd, 1897.—Since showing the patient at the previous meeting various changes have taken place. Up to January, 1897, the vision in the right eye steadily improved. V.: R. $\frac{6}{36}$; L. $< \frac{6}{60}$.

On January 18th vision gradually began to fail in the right eye. "A black thing gradually worked across from the inner corner of the eye." On examination ten days after, a partial detachment of the retina was found to have taken place, extending from the temporal periphery up to the macula, and the optic disc was partially hidden under a fold of œdematous retina. This detachment has since continued to increase, and extends up to the O. D. It forms a narrow steep fold, containing

several retinal vessels, which appeared so prominent and isolated that they were at first thought to be new vessels in the vitreous. From this fold a large vessel (?) comes straight forward to the posterior surface of the lens, where it ends in a branched extremity. Its general appearance resembles a persistent hyaloid artery. It is fixed, and does not move with movements of the eye. The vitreous is now quite clear from all floating opacities, but stretched across it in various directions is a fine transparent membrane with sickle-shaped margins. The membrane is fixed, and does not move with movements of the eye. Mr. Batten thought it might be a detached subhyaloid membrane.

The O. D. is now invisible, being hidden by a mass of exudation, or congested retina, which also completely hides the origin of the vessels.

In various parts of the fundus there are large white patches, not pigmented, over which the retinal vessels pass. The patches do not resemble choroidal atrophy, though they might be choroidal exudation, or the site of old choroidal hæmorrhages.

In the left eye the vision has improved, but the vitreous opacities are still too dense to allow of any distinct view of the fundus being obtained.

V.: R. = p. l.; L. = $\frac{6}{24}$.

(*Card specimen. December 10th*, 1896, *and July 2nd*, 1897.)

---

10. *Peculiar macular changes.*

By Henry Juler.

Miss E. F—, æt. 21, first came under my notice in March, 1895. Her complaint was failure of sight in right eye. She was not aware of anything wrong with the eye till October, 1893, when a bright star appeared to be in

front of it. No history of traumatism. A brother suffers from phthisis, otherwise family history unimportant. She is a healthy-looking girl, and beyond measles and whooping-cough has had no illness.

R. V. < fingers. Peripheral visual field good. A large central scotoma.

L. V. = $\frac{6}{6}$. T. n.; pupil active. No fundus change.

Right fundus oculi.—March, 1895.—A yellowish-white patch seen in the macular region, irregular in outline, and several times the size of the disc; there are a few discrete white spots below and around it. It is raised two or three dioptres, and over it there is a transparent membrane containing one or two thread-like blood-vessels which are continuous with those of the retina. No pigment is present.

January, 1897.—Since March, 1895, she has been constantly under observation, and the white area has to a slight extent increased in size. There is now a patch of pigment visible. The peripheral patches are more glistening than they were. Some newly formed blood-vessels are visible coming forwards into the vitreous humour from one of the retinal arteries external to the pigmentary change.

Remarks.—This appears to have commenced as an exudative choroiditis in the central region of the eye in which the corresponding portion of the retina became involved, and was probably the seat of hæmorrhages. The progress of the case, however, has been slow, and does not evince the usual atrophic changes. The presence of numerous small loops of blood-vessels invading the vitreous body are also peculiar.

(*Card specimen. January 28th*, 1897.)

11. *A case of superficial choroido-retinitis of peculiar form and doubtful causation.*

By E. H. Holthouse and R. D. Batten.

The patient, a woman æt. 25, attended the Western Ophthalmic Hospital in October, 1896, complaining of a mist before her eyes, which at times compelled her to cease work. She first noticed the condition five weeks ago. On examination the fundus showed very extensive superficial choroiditis of a peculiar character, there being numerous small white patches scattered over the fundus, most numerous about the macula and optic disc. The larger patches were four times the diameter of the larger retinal vessels, and the smallest minute circular points. The patches, especially the smaller ones, were in groups, such as to suggest the possibility of the larger ones being formed by the coalescence of the smaller. None of the patches were pigmented. The maculæ were dark, and had retinal pigment cells on the surface. It had been suggested that the maculæ were only dark in contrast to the surrounding fundus, but a red light enabled the pigment cells to be more definitely made out. As to the cause, there was no definite evidence of either syphilis or tubercular disease. She was a delicate-looking girl, but enjoyed fairly good health. Dr. Guthrie had examined the patient, and agreed as to the absence of the two diseases mentioned. That gentleman, however, believed her to be epileptic, and her enlarged thyroid and cardiac disturbance led him to think it was a case of masked Graves's disease. She was the youngest living out of a family of twenty-four children, all of whom, except four, died young of some obscure cerebral complaint, and Dr. Guthrie suggested that this might be the cause of the trouble, and that the condition was akin to retinitis pigmentosa. The mother appeared healthy, but had had

rheumatic and scarlet fever together before marriage, and had had hæmoptysis at the age of nineteen. She had also suffered from a bad thumb and loss of bone, as well as a varicose ulcer of the leg. She was married at twenty; there was no consanguinity, but her husband was always delicate, and there was a history of phthisis in his family. One of the patient's sisters had been examined and appeared to be in good health, but her right eye was very myopic, 20 D., with a deeply pigmented choroid towards the periphery. The vision of the right eye failed after a blow on the forehead; vision in the other eye was $\frac{6}{6}$. The condition of the patient's fundus had not shown any material change whilst under observation. Vision when first seen was $\frac{6}{9}$, at which it remained. The patient somewhat resembled one shown before the Society a year ago (December, 1895).

(*Card specimen. December 10th*, 1896.)

Dr. James Taylor said one thing which struck him about the case, as perhaps showing the possibility of an hereditary taint, or some family tendency towards disease, was the fact that the patient was the offspring of a prolific marriage. Such a circumstance was noticeable not only in cases of Friedreich's ataxy, but also, he believed, in cases of hereditary atrophy of the optic nerve.

---

12. *Disseminated white patches in the choroid, with cholesterine crystals on the surface.*

By E. Treacher Collins.

Henry S—, æt. 69, came first as an out-patient to the Moorfields Hospital on July 13th, 1896, complaining of dimness of sight in both eyes, commencing three years ago, and becoming much worse during the last two

months. He is a married man, and has had nine children, two only of whom are living. Seven died in infancy. His wife has had two miscarriages. He denies having had syphilis or any of its symptoms, but admits having had gonorrhœa in his youth. No albumen in his urine.

V. $\begin{cases} \text{R. } \frac{6}{18} \\ \text{L. } \frac{6}{18} \end{cases}$ unimproved with glasses.

Ophthalmoscopically in each eye numerous scattered white patches are seen around the optic disc; they are especially numerous in the yellow-spot region. They vary considerably in size, the largest are about equal to an eighth part of the optic disc; they are mostly circular in shape, and are all situated beneath the level of the retinal vessels. There is hardly any disturbance of pigment at their margins; on many of them, but not all, bright sparkling crystals are seen, most probably cholesterine. The optic discs and retinal vessels appear normal.

(*Card specimen. October 15th*, 1896.)

---

13. *A case of ? new growth in the macular region.*

By C. H. Walker.

J. W. K—, æt. 73, commission agent. Twelve months ago noticed left eye dim. About March 1st this year he noticed accidentally that it was almost blind. Since then it has got slightly worse.

Patient's father died at age of twenty-nine of "scrofula." Patient himself had strumous disease of the left trochanter and of the glands in the left side of neck when about ten years old. Since then he has "never had two days' illness." He has been a total abstainer for fifty-six years. There is no history or evidence of gout or syphilis. Occasionally he has had muscular rheumatism. Heart, lungs, and urine normal.

R. V. = $\frac{5}{24}$ + 5 D. = J. 1 barely. Field n. T. n.
L. V. = $\frac{0{\cdot}5}{60}$ (fingers at 30″) ; cannot read J. 20. Scotoma for white. T. n.

Left fundus : there is a circular white swelling, slightly more than one and a half times the diameter of the papilla, situated at the macula. The steep, sloping sides of this swelling are a deep red, and have hæmorrhages on them. There are numerous small vessels on the white lump, but the central part is free from vessels, and is pearly white. The summit of the swelling is raised two dioptres above the rest of the fundus, which is quite normal.

Right fundus : there are small dots of choroido-retinitis at the macula and on the nasal side of the papilla, and a few dots of senile guttate choroiditis.

(*Card specimen. May 6th*, 1897.)

Mr. Adams Frost said that as the patient was old, and as there were at the macula of the other eye choroidal changes of a degenerative character, he would suggest that it was simply an attack of choroiditis. If it were sarcomatous he thought it would be more prominent than it appeared to be.

The President said he would be inclined to take the view that he understood Mr. Frost to take, namely, that it was probably a variety of senile central choroiditis in which there was the formation of connective tissue, having an appreciable though not necessarily a great thickness. He thought he had seen several cases like the present one in appearance, in which there was a large area occupying the yellow-spot region, quite opaque, whitish or yellowish white, with some mottled hæmorrhages beyond it and in contact with its edge, with the retinal vessels riding up clean over the area of the patch. It was desirable to know what were the later appearances. If these cases could be followed up they might be found to run into more or less complete atrophy, such as was depicted in the atlases under the name "central choroidal atrophy."

VI. DISEASES OF THE OPTIC NERVE.

1. *Hereditary or congenital optic atrophy and allied cases.*

By Simeon Snell.

The subject of hereditary amblyopia was a few years ago exhaustively and ably dealt with in the 'Transactions' of this Society (vol. viii, p. 190) by Dr. Habershon. Since this time, however, not many cases having a bearing on the same subject have been presented to the Society. My intention in this communication is rather to relate the particulars of cases which I have met with, than enter into a discussion of a matter which has already been so fully and well treated in Dr. Habershon's paper.

The first cases are instances of congenital amblyopia, and comprise five members of one family.

Amblyopia (congenital) in three brothers and two sisters.

David W—, æt. 29. Sight always the same as far as he knows. Both optic discs white, edges well defined, vessels unaltered in size. Patellar reflexes good, as they were in all the cases examined. He is colour-blind: (1) greens are greys. (2) Red, light hues of green. (3) Pink, like greens and drabs. (Red-green blind.) V. $= \frac{8}{200}$ each eye, not improved by glasses. Reads J. 16. Smokes one ounce of honeydew a week.

His three children have, he says, all good sight. One, a boy æt. 3, was brought to me; the optic discs were normal, and vision appeared perfect.

Father and mother are both dead, but they had good sight. Father's mother he knows had good eyes, but

he knew (personally) no other grandparents. Mother's father had good eyes, but her mother died when she (mother) was an infant; both saw well. Father's father had good eyes. Inquiries have been made of an uncle (father's brother), and he feels sure that there are no others in the family who are afflicted.

There were eight in the family, three daughters and five sons; five of these were amblyopic—two daughters and three sons.

Affected.—Mrs. W—, æt. 32; David, æt. 29; Charles, æt. 27; Ellis, æt. 24; Ellen, æt. 21.

Unaffected.—Thomas, æt. 30; Joseph, æt. 31; and Rachel, æt. 25.

All the affected brothers and sisters were seen by me.

Mrs. W—, æt. 32. R. E.: V. = $\frac{3}{36}$; L. E.: V. = $\frac{3}{60}$. No correction improves vision; optic discs pale; feeble colour sense; calls greys, pale blues; light brown, grey; and reds violet.

Charles, who was the first to be seen, − 1 D. V. = $\frac{6}{60}$ each eye; colours not good, but defect less definite than in the others; optic discs pale, and, as in all the rest, this is especially marked on the outer side.

Ellis, æt. 24. V. = $\frac{6}{60}$ each eye; distinct pallor of optic discs; left, especially, white. (1) Green test, matches greys. (2) Violet test, matches light blues. (3) Red test, matches light brown and green.

Ellen, æt. 21. − 6 D. = $\frac{6}{24}$; discs pale; crescents; colours normal.

Joseph, æt. 31: both optic discs normal. R.E.: V. = $\frac{20}{20}$, L. E.: V. = $\frac{20}{40}$. He says the sight of the left eye was better before he had a blow over it some years since with a brick. Reads J. 1 easily with each eye. He is colour-blind; dark greens are confused with reds, pale blues with pink.

Field of vision good in each case. No central scotoma. No pigmentation in either case; no night-blindness; vision better at night.

The association of colour-blindness with the amblyopia

is interesting. Four of the five affected had colour-sense defects, including one female; the only one with normal colour perception was a girl. Besides this a son, Joseph, with normal vision for form, was colour-blind.

Amblyopia in two brothers.

C. E. C—, æt. 17, a bank clerk (Book 6—537), was brought to me on October 22nd, 1891, on account of failure of sight of the left eye. The onset had been rapid. A definite history was given in this way:—He could never use the telescope with the right eye, and therefore employed the left. He had spent a holiday six months before at the sea-side, and he used his telescope a good deal. At this time he could use the left eye perfectly. The failure of sight had occurred especially recently.

Examination disclosed the following conditions:—L. E.: V. = fingers; optic disc pale, vessels somewhat attenuated but not markedly so.

The only complaint made of the right eye at this time was of its tiring after continuous work. On October 29th, 1891, it was examined after the instillation of homatropine, then V. + ·75 D. = $\frac{6}{9}$. It was noted that the optic disc was hyperæmic. He was prescribed + 1 D. for near work.

Shortly after this date vision in this eye commenced to fail. He did not, however, again come to me until November 19th, when R. V. was reduced to $\frac{6}{36}$. On the 21st V. = $\frac{6}{60}$. After this date, under the administration of at first iodide of potash, and subsequently biniodide of mercury, the deterioration was somewhat stayed. The peripheral field at first showed little or no alteration, nor did it do so until the following February. The field of vision at this period is interesting (Fig. 5), the failure from above reaching to and embracing an area round the fixation point. I have no chart showing a central scotoma earlier than this, though my recollection is that he did complain of a mist being in the "front" of his

FIG. 5.

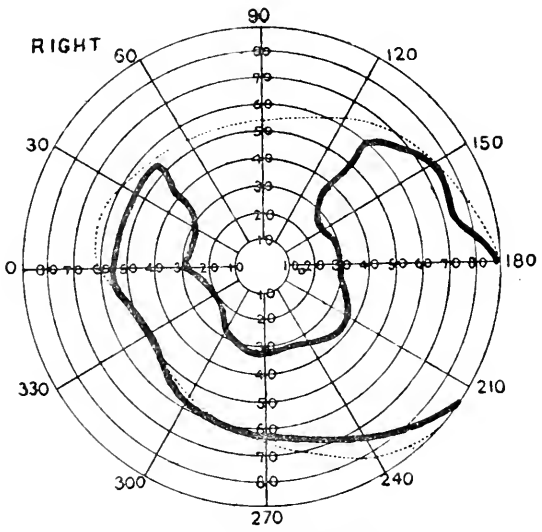

C. E. C—, February 25th, 1892.

FIG. 6.

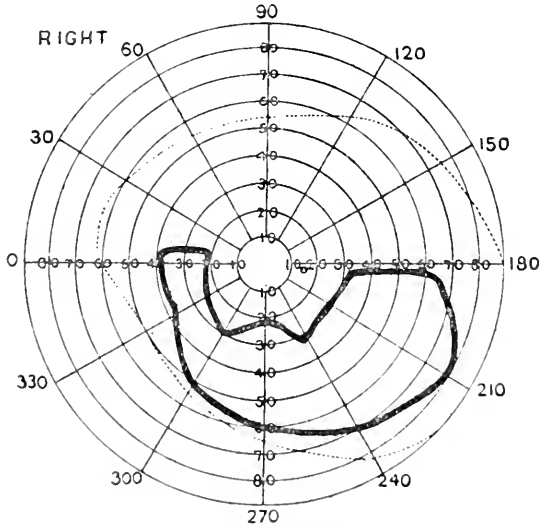

C. E. C—, April 21st, 1892.

FIG. 7.

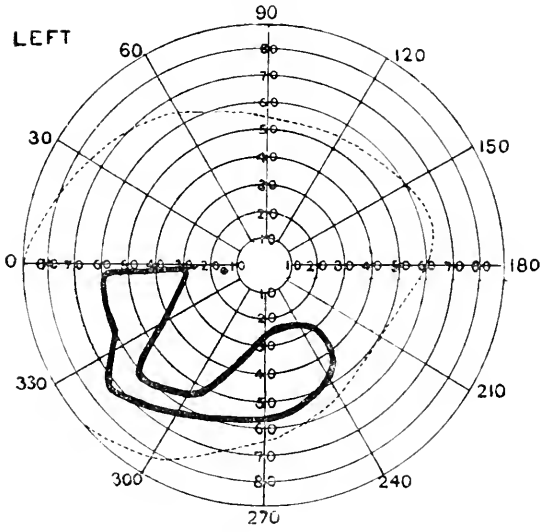

C. E. C—, November 10th, 1892.

FIG. 8.

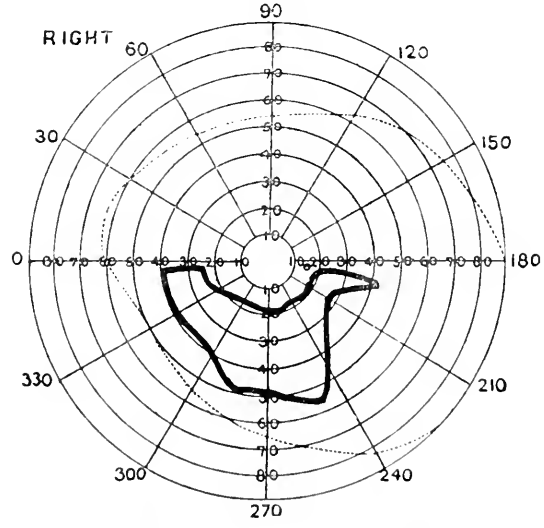

C. E. C—, November 10th, 1892.

eye. When the chart mentioned was taken V. $= \frac{5}{200}$. A later field (Fig. 6) (April 21st, 1892) reveals a further deterioration, and subsequently that of November, 1892, shows, when compared with the left, how similar have been the results in the two eyes (Figs. 7 and 8). It is noted of the right—

"The test object is seen very faintly in field, limited as it is, at places only like a whitish mark, at others he merely sees something passing." V. $= \frac{3}{200}$; reads about J. 20.

It is noted of the left (the first affected)—

"The test object is faintly seen over the shaded area, but even this is uncertain, as the eye wandered, vision at the fixation point being entirely absent." V. = fingers.

At this latter date the condition of each optic papilla was that of atrophy with diminution in the calibre of the vessels. Treatment in this case was apparently without influence for good. Mr. Pridgin Teale saw the patient, and at his suggestion mercury sufficient to touch the gums was employed, but the progress downwards became after its use more rapid.

The personal history of the patient was good. An attack of influenza had apparently no connection with the eye mischief, nor had a blow on the head several months before the sight began to fail. He was not a smoker, and there was no reason to suspect masturbation.

The father and mother were not related before marriage. I could learn of no cases of blindness in other members of the family. It has recently come to my knowledge, however, that a younger brother, and about the same age as my patient was when he was attacked, has since become afflicted in a similar manner and with a like unfortunate result. I have not had an opportunity of seeing this brother.

Amblyopia in two brothers.

John T—, æt. 36. Sight began to fail at twenty-four or twenty-five, and he came to me at that time. Now,

January 27th, 1896, the optic discs are white—bluish white. V. = Fingers at one foot. Field of vision very limited, but no satisfactory chart could be taken with perimeter. Colour defects. Sight gradually failed; began to be sick in the hay-field in August; a dimness came over the eyes; got slowly worse after that, and has been as bad as he is now for about ten years. Left optic disc distinctly pale; right less so, no evidence of preceding neuritis.

My note in September, 1884 (Book 3—785), says that sight had been failing for two months, but that it had become rapidly worse during the last month. R. V. = $\frac{6}{200}$; L. V. = $\frac{4}{200}$. Refraction H., but V. not improved by correction.

George T—, æt. 21, came to the Infirmary on November 19th, 1895. Sight had been failing two or three months. Before this his vision was quite good. As a child had been to school and learned to read and write. The sight went very fast. Discs white; arteries small. R. V. = fingers; L. V. = $\frac{2}{200}$. Fields much contracted.

January 27th, 1896.—V. = the same. Colour defects in each eye. Both patients work at farming.

The two patients have no brothers living; two died, one aged three, the other aged two, both from croup. Five sisters, all living, aged thirty-four, thirty-two, twenty-nine, twenty-five, and eighteen. All these sisters have good sight. Father and mother are living, each aged sixty-three. The mother has had a "stroke" affecting one side. Both have good sight. Father has been a carter. Father's mother and father both dead, were good sighted, and so were the father's brother and sisters. Mother's father was good sighted. Mother's mother, aged ninety-three, is still living with good sight. Mother had a brother with bad eyes, which came after smallpox about the age of forty, but he lived until he was sixty-five.

Amblyopia in a young man (cousin to the last).

W. S—, æt. 25, a butcher, came to me on January 10th, 1896. The sight of left eye had been failing for a few weeks; the right was becoming impaired. L. V. = fingers at one foot; R. V. = $\frac{6}{12}$, which no glass improved. Both optic papillæ were hyperæmic. He complained of a "mist in front" of the right eye. The field of vision disclosed a large central scotoma, with peripheral contraction. The left field was concentrically contracted, but a satisfactory field of this date has not been preserved. Failure had commenced with a scotoma, as the right had done.

Shortly after this date he ceased to attend, and was not seen until August. Then both optic discs were white, and the vessels reduced in calibre. R. V. was reduced to J. 20; L. V. remained as when first seen. He did not see with either eye centrally.

Up to the time of writing (October) the condition has not undergone further deterioration. The charts of field of vision of this date are appended (Figs. 9 and 10).

Shortly before failure of sight commenced he had been married—three months previous to his first visit to me. Whilst this suggests the possible influence of marital relations on the onset of the affection, it should be pointed out that inquiry disclosed only moderate sexual indulgence.

As in instances referred to in Dr. Habershon's article, the failure of sight in this case was preceded and accompanied by much sleeplessness. He was a very moderate smoker and drinker.

His mother died aged fifty-one, but his father is alive aged fifty-five. He has three brothers, aged twenty-seven, twenty-three, sixteen, and a sister aged twelve, all with good sight.

Inquiry elicited that the two cases previously related (J. T— and G. T—) were his cousins—the sons of his mother's sister. Beyond this no evidence of any other relations being afflicted was obtained.

FIG. 9.

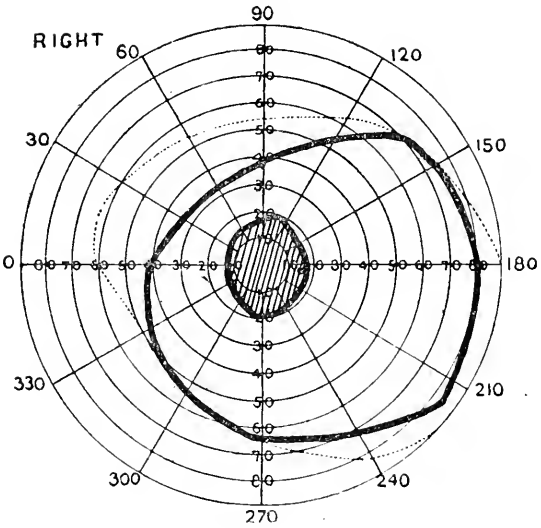

W. S—, Oct. 14th, 1896. Shaded area = absolute scotoma.

FIG. 10.

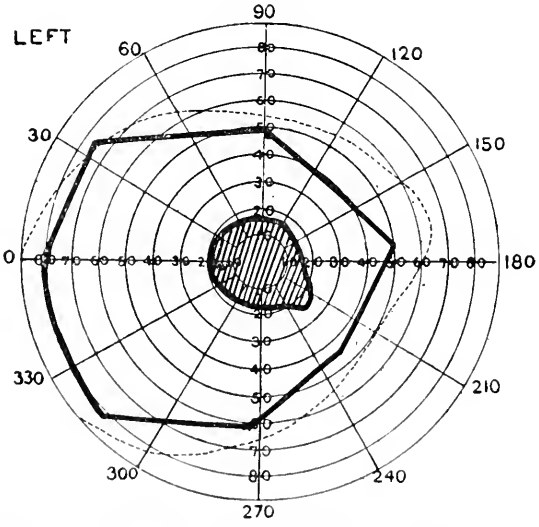

W. S—, Oct. 14th, 1896. Shaded area = absolute scotoma.

Amblyopia in two brothers and one sister.

W. U—, butcher, æt. 40, was first seen in 1883 (Book 3, p. 216).

September 21st, 1896.—Discs white, vessels somewhat reduced in size; no deposit of pigment in fundus; left disc paler, and arteries and veins smaller, than the right. Nothing suggesting retinitis pigmentosa. Pupils of normal size. Sight as good at night as in the day. V. = $\frac{7}{200}$ in each eye, which nothing improves; reads J. 20 with each eye. The fields of vision are concentrically contracted, and there is a central scotoma in each.

His sight gradually began to fail at the age of thirteen or fourteen. He could see well at school. It had become much worse during the four or five years before his visit to me in February, 1883. After that time sight gradually further deteriorated, but has been stationary for several years. The patient is married and has no family. He is colour-blind; he matches greens and greys; pinks and light blues; reds, browns, and purples.

Family history.—Father aged sixty-four, and mother aged sixty-three, have both good sight and are in good health. Mother's father and mother died at the ages of sixty-five and seventy respectively, and were good sighted. No consanguinity in the family. Father's father and mother are both dead, but they had good sight. The family consists of six living (there were others who died in infancy), four sons and two daughters. William, forty (affected); Frederick, thirty-six (normal sighted); Anne, thirty-two (affected): Emma, twenty-nine (normal sighted); Isaac, twenty-six (affected); Harry, twenty-three (normal sighted).

It will thus be seen that two sons and one daughter are affected with optic atrophy. It will also be further noted that whereas the eldest child, our patient, is affected, the next, a son, is normal-sighted, and that this alternate arrangement holds good through the remaining members of the family. The next in order, a daughter, is affected,

then comes another daughter with good sight, then a son with the affection, and last a son with normal vision.

The daughter was seen by me in 1883, but at my request again presented herself at the same time as her brother, and the following record was taken :

Mrs. W— (sister to Wm. U—), æt. 32 (Book 3, p. 318).

September 21st, 1896.—Both optic discs are pale, especially the outer side, and there is a little deposit of pigment in the macular region of each eye, little dots of pigment at the periphery ; the discs are not waxy-looking, and nothing beyond the pigment suggests retinitis pigmentosa. There is no night-blindness. Vision $= \frac{7}{200}$ each eye, not improved by any lenses. Reads J. 18 each eye. Normal to colour test, but slow in matching. Patient has been married for several years, but has had no family. Sight was good up to about the age of thirteen. It has remained in the condition it is in now, for many years.

I have not been able to examine the other affected brother. His vision, however, I learn, commenced to fail at about the same age as the others. He is married with three (?) children. They are, I understand, good sighted.

The unaffected brothers and sister are married, and their children have, as far as I can ascertain, normal eyes.

Amblyopia in three brothers—smokers.

John B—, æt. 62, puddler, found his sight failing about ten years ago (1885), and came to me at the infirmary shortly afterwards. The left eye became affected first, "a shade coming over the eye ;" its onset was gradual ; the right eye commenced to fail eight months after, when he was attending the infirmary.

He thinks he sees more now than he could do when at his worst. He had to be led to the infirmary, but now can find his way about unaided. For the last seven years his sight has remained about the same. No sickness at any time.

August 11th, 1895.—Both optic discs white; arteries attenuated; changes rather more marked in L. V. = $\frac{5}{200}$ each eye; reads J. 16.

Wm. B—, æt. 57, sight was impaired in both eyes for a short time before he came to the Sheffield General Infirmary in 1887. He could find his way there by himself. Sight improved slightly, but has remained unchanged for years now.

August 21st, 1895.—Both optic discs white; arteries small, but not greatly diminished in calibre. V. = about $\frac{4}{200}$ each eye; reads J. 20.

Jas. B—, æt. 44, sight has been affected in both eyes for about eight years, *i. e.* several months before he came to the Sheffield General Infirmary in 1888.

August 11th, 1895.—Both discs white; arteries diminished in size. V. = $\frac{4}{200}$ each eye; reads J. 20.

Family and personal history.—Mother died aged eighty-five, and had perfect sight up to the last. Father died at age of sixty-seven; sight always good. The family consisted of, four sons and one daughter living, and two daughters who died in infancy. One brother, the youngest, aged forty-three, and the sister aged fifty-three, are unaffected. Mother's brother was a railway guard; he became blind in middle age, and never recovered sight. Father's father lived to an old age, and had good sight. Mother's father not known. John B— has three sons, all good sighted. William B— has one son and five daughters—sight good. James B— has no children. William B— fourteen or fifteen years ago was subject to fits, occurring every four or five weeks. He had the first fit when he was twenty-four, and they recurred till he was forty. No consanguineous marriages in the family. The brothers being puddlers worked before hot metal; all were moderate smokers, one or two ounces weekly; patellar reflexes and pupils active in all. The fields of vision exhibit peripheral contraction, most marked in William B—. In each a central scotoma was present, and it remained in all when they were examined last year (1895).

In each case, when first coming under observation, a pinky appearance of the papillæ was noticed. In all one eye became affected before the other.

The treatment, besides a discontinuance of the use of tobacco, comprised, among other remedies, iodide of potass., and later hypodermic injections of strychnine, and galvanism.

The cases which I have just related range themselves into three groups.

1. This group consists of the family in which the amblyopia was congenital; no alteration in the state of vision has been recognised at any time in any of the cases. The association of colour-blindness in the amblyopes as well as in those (at least one) with normal vision must be noted.

2. This is the largest group, and comprises eight cases. They belong more strictly to the class described by Leber as hereditary optic atrophy. They correspond closely with the usual age-limit of the onset of the affection given in Dr. Habershon's article—eighteen to twenty-three—and also in many other points; for instance, the parents were not afflicted, and the eyes became affected usually at separate times. Headache was a symptom, and epileptic attacks were present in two instances. There was no consanguinity in any instance, and vision was, when ascertained, acknowledged to be as good in bright daylight as at night. A central scotoma was present in some of the cases, but in others, contrary to what Leber laid down, there was contraction of the periphery of the field.

The inciting cause is not evident. In one (W. S—) vision failed after marriage. I have met with three instances in young men, in whom vision became very seriously, and in two permanently impaired shortly after entering upon matrimony, and in a man also in whom long-continued sexual abuse seemed to be the cause of optic atrophy.

The charts of C. E. C— (pp. 69, 70) are interesting.

They exhibit in the early stage of the disease in the right eye failure of the upper part of the field, reaching down to and including a central area, and in the last stage (when seen by me) a portion only in the lower field remained very similar to that persisting in the left eye.

3. The three brothers in this group belong to the class related by Mr. Edgar Browne in the 'Transactions' of this Society (vol. viii, p. 235). His three cases were like mine, brothers, and they were also smokers. The difference between such cases and the ordinary instances of tobacco amblyopia is at the outset difficult or impossible to recognise. The first of the three, but for the pinkiness of the optic discs, was not distinguishable from a tobacco case, which on discontinuance of smoking should make a satisfactory recovery. The occurrence of the affection in the three brothers indicates, it would seem, a family disposition to optic atrophy, and the tobacco was at the most the incitant. It must be recollected that all three men, as puddlers, were exposed to the glare and the heat of hot metal. My experience with iron-workers has not, however, shown that the very intense brightness and heat often encountered in their occupation is provocative of serious disease of the fundus. A marked difference will be noted in the age of these brothers when the optic atrophy showed itself from that of the other cases related in this paper, and also from the usual age-limit mentioned by Dr. Habershon. (*October 15th*, 1896.)

The PRESIDENT asked what was the state of the fields of Group I, and whether the patient saw better in a dull light than in daylight. He also inquired whether there was any family history of other diseases of the nervous system, such as hereditary ataxia; epilepsy was mentioned in the paper once or twice. He expressed the opinion that enough had not been made hitherto of the different types of hereditary or family disease of the optic nerve. Some years ago he had recorded several cases in which, together with total colour-blindness,

there was a varying amount of amblyopia, with very slight ophthalmoscopic change, and no progress from bad to worse, the patients having remained in the same condition as when they first came under notice. Two or more cases usually occurred in the same family. A marked symptom in all was that they saw much better in a dull light than in daylight. The peculiarities of this group of cases had perhaps not been sufficiently recognised. It was probable that they belonged to the same class as Mr. Snell's first group.

Dr. HABERSHON said the Society was extremely indebted to Mr. Snell for reporting the cases. He thought all such cases should be reported, because there were undoubtedly many allied cases, such as the President had referred to, which did not exactly tally with the original account of Professor Leber. He imagined the cases of the latter authority tallied with Mr. Snell's second group in point of age, in the appearance of scotoma, in the absence of peripheral contraction, and in other respects. Some of the cases which Mr. Nettleship supplied to him for the paper which he read on the subject differed from those of Leber, inasmuch as they occurred in smokers. Evidently in these there was some weakness of the optic nerve—some predisposition; and thus the actual disease of the nerve appeared to be precipitated when depression of the nervous system occurred. In some cases the cause was sexual, and in others it was tobacco. Members would remember Mr. Power's paper on the "Normal and Pathological Conditions of the Sexual System in Optic Nerve Disease," and it would be interesting to hear that gentleman's views on the point. Mr. Snell's Group I he thought a little obscure; they were not cases of retinitis pigmentosa, but seemed to be allied a little more to those early cases associated with night-blindness which were classed under the generic term retinitis pigmentosa.

Mr. POWER said he could give very little information on the point. He would like to express his appreciation of the trouble Mr. Snell had taken in collecting the

information for his paper, as they all realised how difficult it was to glean the necessary facts to compile a connected family history. It was not surprising that the conditions described were hereditary, seeing that this was the case with many other diseases of the nervous system, such as lunacy and deafness. He believed family history could be traced in many cases, but few men had the time available for the purpose. The paper they had just heard required careful study.

Mr. Snell, in reply, said some of the cases in his second group did differ from those of Leber, in that there was peripheral contraction of the field.

---

2. *A series of cases of optic atrophy following injury, chiefly of the anterior part, of the head.*

By Simeon Snell.

The whole subject of blindness following head injuries is an interesting and important one, and it is in the hope that the instances coming under my notice may be of some value in this connection that I have collected them together in this paper.

It has for long been recognised that some relation exists between injuries of the anterior part of the skull, and monocular blindness. The belief was also for long held, when the injury was in the frontal region, that the explanation was to be found in a lesion to some branch of the fifth nerve. But it was Berlin who pointed to the correct causal relation when, as is well known, he related at Heidelberg in 1879 three instances of blindness, and mentioned the observations of Holder, showing the frequency with which in fracture of the skull the optic foramen was implicated, as shown by an analysis of carefully made autopsies of 126 cases of fracture of skull.

"Holder* held a position for thirty-three years corresponding to a medical coroner. In 88 of the 126 cases the fracture involved the base, and in 80 the orbital roof was likewise fractured, making 90 per cent. In 54 cases, or 60 per cent., the lesion extended into the optic foramen." These cases were sufficient to demonstrate the frequency with which the optic canal was invaded in fracture of the skull. Leber has also explained that cases of monocular blindness following blows about the supra-orbital region are due not to any interference with the fifth nerve, but are caused by fracture in the vicinity of the optic foramen. Berlin, moreover, points out that as early as 1845 Nuhn sought to explain these cases as due to injury or rent of the optic nerve within the optic foramen. Clinical evidence justifying these explanations has been accumulating, and cases have been published that point to the involvement of the optic nerve by fracture of the optic foramen, even when the cranial injury is not in the immediate orbital region. The cases I am about to relate will illustrate this, and it is particularly shown in one by Callan, where a blow over the left orbit was a cause of blindness in the right eye, and a similar one (Case 15) is among my own cases to be now related.

It may be convenient to comment upon the various points raised by my cases after I have related them. There is one, however, that may be mentioned now, though I refer to it again, as it will enable me to group off some of the cases as differing from others I have to relate. It is a matter also, as I shall later on show, of medico-legal interest. The point I refer to is the time at which the decoloration of the optic nerve is noticeable. Blindness, either absolute or incomplete, in the class of cases we are

* *Vide* an interesting article by Peter A. Callan, M.D., on "Nine cases of orbital traumatism resulting in immediate monocular blindness through fracture into foramen opticum; in one of these cases the blow was over the left orbit, causing blindness of the right eye" ('New York Eye and Ear Infirmary Reports,' vol. i, part 1, January, 1893).

dealing with is either observed immediately, or, if the patient has been rendered unconscious by the accident, as soon as the senses are regained. If such a case, however, be examined by the ophthalmoscope, though sight be lost, undue pallor of the optic papilla will not, in every case, be immediately detected. This fact permits an opinion to be formed in some instances as to the situation of the lesion to the optic nerve. If the papilla at once show decoloration, the injury has been in front of the entrance of the central retinal artery ; but if the lesion be posterior to the site where this artery pierces the nerve, the pallor of the disc may not be noticeable for three weeks or longer. In the former category will be found those instances in which the optic nerve has sustained direct injury by some instrument penetrating the orbit from the front. The following are two such cases. I have met with others, and similar instances are on record.

Case 1. *Direct injury to the optic and sixth nerves.*—James A—, æt. 27, a mason, was engaged on March 2nd, 1883, in digging up a road, when a fellow-workman accidentally struck him in the left eye with his pickaxe. He stated that sight was immediately lost. His wounds were attended to by a medical man, and he did not come to the infirmary until March 6th. There was then some swelling of the left eyelids, and a large wound of the conjunctiva above and to the inner side, which had been sutured. It was evident that the pick, after injuring the upper eyelid, had severed the conjunctiva, and entered the orbital cavity between the superior and internal recti. Vision was found to be lost, there being no perception of light. The pupil acted only with its fellow. The external rectus possessed little if any power ; the eyeball could not be turned outwards. Other movements were good. The optic disc was whiter than normal, presenting a marked contrast to its fellow. The patient attended for a time, and then disappeared.

February 1st, 1884.—He came at request to-day. The

optic disc is white and atrophied, and there is no return of vision. He is able to move the eyeball outwards fairly well; he says the power of movement has returned gradually, but particularly during the last two months.

In this case there was clearly a direct injury to the optic nerve. It would appear also that the pick at the same time singled out the sixth nerve, and thus impaired the outward movement of the eye. The interference with the motility of the globe was greater than would be accounted for by the puckering of the wounded tissues, or injury to the external rectus muscle.

Case 2.—A. J—, æt. 12, came to the infirmary on October 24th, 1888. Six days before he was playing in a yard with some other boys; one was throwing some straw at him with a hay-fork, when one prong struck A. J— on the face and pierced the right lower eyelid about a quarter of an inch below the outer canthus.

The fork penetrated the lower eyelid, and the lad withdrew it himself. There was not much bleeding or pain. The next day, when his attention was attracted to it by his mother, he found he was blind in the right eye.

When seen on the day mentioned, four days after the accident, there was distinct pallor of the optic disc. V. *nil*, not even p. l.

The fork appeared to have penetrated the lower lid and passed beneath the globe, and injured the optic nerve behind. On the outer side of the globe there was some little ecchymosis. The pallor of the papilla soon turned to a definite white.

The next two cases are similar to those just mentioned, in that the injury was received from the front to the orbit direct, but they differ in that the ophthalmoscopic signs at first were *nil*, and that the decoloration of the optic disc only showed itself after an interval of some weeks. The injury to the optic nerve was further back, and was posterior to the entrance of the central artery of the retina into the nerve. The first of them, moreover, like

Cases 1 and 2, was caused by a foreign body penetrating the orbit. It was related by me in conjunction with Mr. Garrard before this Society some years ago ('Trans.,' vol. viii, p. 277). It may be briefly referred to here as follows.

Case 3.—Frederick S— was playing on April 19th, 1887, when he fell, holding in his hand a piece of stick, which pierced the left upper eyelid just above the margin. He says the piece stuck in, and that another boy pulled it out.

The patient was taken the next day to the Rotherham Hospital, and it was thought then that only the upper eyelid, which was swollen, had been injured; the eyeball appeared intact. The house surgeon noted that there was a small jagged wound just above the upper margin of the left upper eyelid, and that the eye was closed. When seen two days later the eyelid was still drooping, although any blood or inflammatory exudation occasioned by the small wound had become absorbed.

On lifting the eyelid it was noticed that the pupil was dilated and did not react to light, also that the eyeball could be moved only downwards and outwards. Evidently there was complete paralysis of the third nerve. The optic disc appeared normal.

I saw the patient on May 9th, and corroborated the diagnosis of complete paralysis of the third nerve. There was no evidence of the stick having deeply penetrated into the orbit. The disc was a little paler on the affected side.

The palsy of the third nerve gradually passed off, and on June 5th it was noted that the patient could fully elevate the upper eyelid, but could not completely follow with the left eye movements inwards, upwards, or downwards. The pupil was not quite so fully dilated as at first. It acted very slightly to light, but much more appreciably to accommodation.

June 30th.—Has now complete control over muscles of upper eyelid and eyeball. Pupil dilated more than right, but acts to light and accommodation.

On November 3rd I saw the boy again. The palsy of third nerve had passed away; the ocular movements were good. There was no ptosis; the pupil was about the same size as that of the other eye; it acted imperfectly, if at all, to light. The optic disc was distinctly white; the retinal vessels were not, however, lessened in size. Vision was very imperfect; it was doubtful whether it was much more than light perception, or the observing of some large object.

At no time was there any paralysis of any other muscle of the orbit beyond those supplied by the third nerve. Fourth and sixth were unaffected, and so, indeed, was the ophthalmic division of the fifth.

An interesting feature of this case is the third nerve palsy, which, it will be noted, completely recovered. An easy way to account for the injury to the optic nerve is to assume that the stick penetrated deeply into the orbit, and injured the nerve directly. The late appearance of the decoloration of the optic disc is opposed to such an assumption. It is more difficult to account in this manner for the careful selection of the whole of the third nerve, and the escape of the other orbital nerves. The evidence, as far as it went, did not appear to be in accord with such deep penetration as would have involved direct injury to the optic nerve in or close to the optic canal. Nor did the blow appear powerful enough to have driven back the eyeball in such a way as to have occasioned fracture of the optic foramen. Such a force would probably have also caused some injuries to the eyeball, which, if not visible externally, would have been discoverable with the ophthalmoscope, such as hæmorrhages or rupture. Short, however, of such a degree of force it is possible that it may have been sufficient to have driven back the globe into the orbit, and in this way to have compressed or jarred the optic nerve, or torn it, or its sheath. Another hypothesis, and a more likely one, is that the stick impinging against the roof of the orbit had occasioned a

fracture running backwards, and involving the optic canal and the optic nerve.

Case 4.—J. M—, æt. 25, applied at the infirmary on January 7th, 1881. He made the following statement :— "On the night of the 3rd inst. he was set upon by two men, and struck in the eye, and rendered senseless for a few minutes. He was picked up and walked home. A wound in the eyelid continued to bleed freely for some time. It was not until the 6th inst. that he was able to open the eye, and he then discovered his inability to see with it. On the 7th, the day he came to the infirmary, the eyelids were very much swollen and discoloured, and there was a good deal of effusion in the ocular conjunctiva. There was a cut about half an inch in length, situated just below the centre of the lower eyelid. The pupil was dilated and sluggish. There was absolutely no perception of light. The ophthalmoscopic signs were negative, but subsequently the disc became white and atrophied. Beyond the subsidence of the swelling of the eyelids, &c., no improvement took place under treatment.

In the case just related the injury to the optic nerve must also have been in the optic canal or far back in the orbit, as signified by the late appearance of the decoloration of the papilla. The blow was largely on the globe itself, and may thus have caused the fracture at the optic canal or injury there to the optic nerve. But the margin of the orbit was also involved, and here again a fracture may have been occasioned running backwards into the optic canal. In any case the hæmorrhage into the orbit was considerable, due perhaps to the tearing of the nerve or its sheath, and by compression it may have added to the initial nerve injury. Hæmorrhage into the orbit to a considerable degree will be noted also in Case 5.

The remaining cases are all instances in which the decoloration of the optic nerve did not appear until an interval had elapsed after the accident. The injuries by

which the loss of sight was occasioned occurred to different parts of the head. The cases can, therefore, well be divided into groups.

Those involving the eyebrow, seven in number, are the following.

Case 5.—W. H. T—, æt. 15, from Ecclesfield, was admitted into the infirmary on January 1st, 1878. A week previously he had been struck by a large stone over the right eyebrow and forehead. He bled profusely from the mouth and nose. The eyelid became swollen and discoloured, and the next morning the eyeball was noticed to be considerably pushed forward. Iodide of potassium was prescribed, and the protruded eyeball gradually subsided. The disc, however, became white and atrophied, and vision was reduced to light perception.*

Case 6.—Walter D—, æt. 43, applied at the Sheffield Royal Infirmary on October 26th, 1896, after injury to head. He fell from his trap on August 10th, 1896, on to his head, and was rendered unconscious for twelve hours. There was a wound of forehead over left eyebrow two and a half inches long. Patient was intoxicated at the time of the accident; the wound was stitched, and healed by primary intention. He complained the next day on recovering consciousness that the sight of the left eye was misty. He applied again now because the left eye remained dim. On examination it was found that the optic disc was white, but the vessels were not noticeably altered in size. V. + 5 D. = $\frac{6}{36}$; R. V. + 4·5 D. = $\frac{6}{9}$. Field of vision contracted to about 40° in all meridians. Beyond this he had completely recovered from the accident.

Case 7.—James S. L—, æt. 45. On the evening of January 11th, 1894, patient was attacked by roughs as he was coming down some steps. He was hit over the eye,

* *Vide* 'Ophthal. Review,' 1882, p. 402.

and the left upper eyelid was scratched by one of the men who patient thinks wore a knuckle-duster. He then fell, cutting his forehead just about the upper and outer part of left eyebrow. Patient was rendered insensible, and did not recover consciousness till the next morning. He was intoxicated at the time of the injury. The left eyelid and the surrounding parts, and also the right eyelids, which were uninjured, began at once to swell, and by the 14th the left upper eyelid was very painful, and had commenced to get black. By the 15th it was a yellowish-white colour, and had apparently begun to slough. On January 16th he was admitted into the infirmary. On admission the left upper eyelid had a wash-leather appearance, and it could be stripped off in pieces with forceps. There was a wound also above and to the outside of the left eyebrow (due to his striking the ground on falling). This was unhealthy-looking and was discharging pus. On January 17th the scalp around the wound began to swell and get red. Temp. 102° F. Boracic fomentations were applied. The opening above and external to the eyebrow was put in connection with the surface of the eyelid by means of a drainage-tube.

January 18th, 1895.—Temp. 105° F. The swelling had extended backwards towards the occiput; it was slightly red and very tender to the touch, and boggy feeling. Pulse 110 and intermittent; he was delirious and in a profuse sweat, which had a sour smell. His bowels were confined. He was treated with Tinct. Ferri Perchlor. ℥xx every four hours; a tablespoonful of brandy every four hours. Milk diet and soda water and Valentin's meat juice. Three incisions were made into the scalp, viz. just above and to outer side of external angular process on left side; midway between that process and the external auditory meatus on a level with such a line; and an inch above the auricle. Drainage-tubes were inserted in all these incisions and boracic fomentations were applied. The discharge on the dressings was very scanty, but on pressing the scalp towards the incisions pus welled out very freely.

The latter process was always done at each dressing. The bogginess extended this day as far back as the occipital protuberance to the middle line, but not beyond it. It did not go below the zygoma.

January 19th, 1895.—Swelling has not increased. Temp. 103·6° F. Still delirious; pulse slightly better. Quiniæ Sulph. (gr. iv) was added to the Tinct. Ferri.

January 20th, 1895.—Temp. 102·4° F. Delirium continues. Pulse better. Bowels confined, and Mistura Alb. prescribed daily. Sweating is less. Swelling on scalp has greatly decreased. Pus can still be freely pressed out.

21st.—Temp. 101·6° F. Still improving.

22nd.—Temp. 99·8° F. The incision above the ear healed. The chief accumulation and escape of pus is a little above the inner canthus of the left eye.

23rd.—Temperature normal. Patient still shows signs of not being quite in his senses, and was treated with Pot. Brom. grs. x, and extra diet.

31st.—Skin grafts were applied to the left upper eyebrow, which was a granulating, raw surface, the yellow slough having been completely removed. Cocaine was applied, and the surface scraped with a sharp spoon, and cleaned with 1 in 500 solution of mercury perchloride. Next, three small grafts were applied so as to cover the whole raw surface. The grafts were taken from the anterior surface of patient's arm with a razor, the superficial layer of epidermis being only removed. They were covered with lint soaked in melted boracic ointment, over this some gauze and wool, the whole being fixed by a bandage and left undisturbed for four days. By this time the whole eyelid was covered with epithelium, except a narrow strip half an inch long and half an inch wide. This was covered with fresh grafts in the middle of February, and treated as on the previous occasion, the ultimate result being that practically no deformity is noticeable.

The patient says that he has never seen with his left eye since the accident. He has now only light perception. He can just close the eye. When open a rim of sclerotic

is left bare. Left disc white, vessels not much reduced in size. Chronic otorrhœa left side previous to assault.

It appears more probable that the optic atrophy in this case resulted from the fall on eyebrow and fracture of the optic foramen rather than from the erysipelas.

Case 8.—Margaret S—, æt. 9, fell down twenty-two steps on to her head on November 5th, 1893; her left arm was also bruised. She received a wound at the outer part of the right eyebrow. She was unconscious about nine hours (according to her mother's account, who remained with her in the infirmary). As far as her mother knows she has never seen out of the right eye since. She did not bleed from the ears or nose. She remained in the infirmary three weeks. Wound was stitched and healed up quickly. In October, 1894, she had no light perception with the right eye. The scar is slightly less than an inch long, situated to the outer side of the right eyebrow, and slants in a direction from above downwards and backwards, commencing at the external angular process of frontal bone. Optic disc white; no alteration in the size of vessels.

Case 9.—Mrs. Sophia M. T—, æt. 44, was admitted an out-patient at the Sheffield Royal Infirmary on December 1st, 1893. Patient was thrown out of a carriage in the early part of last July (1893). There were a lot of boulders about, and probably she struck her eyebrow against one of them. She also injured her thigh and fractured her left arm. No other injuries to head except eyebrow. She lost consciousness for a short time, and does not remember being picked up. The first thing she recollects was that she was sitting on a chair. The situation of scar is on outer third of eyebrow, and it is three quarters of an inch long. At the time when she recovered consciousness she found she was unable to see with her left eye, everything appeared dark. There had apparently been no injury to eyeball, nor was it ecchy-

FIG. 11.

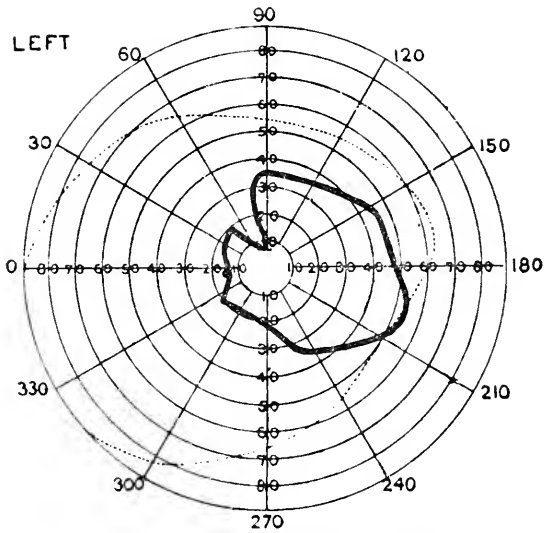

Sophia M. T—, January 29th, 1894.

mosed; but there was a good deal of swelling of the eyebrow and the adjoining parts of the face and over the malar bone, which was bruised. After three days, when the eye was released from the bandage, she could see figures walking about, and sight has gradually improved, more quickly at first than lately. Right eye is unaffected. Vision in left is $\frac{6}{24}$ (poor), and the optic papilla is white; vessels unaltered in size; field of vision contracted on outer side (Fig. 11). A few months later vision had improved to $\frac{6}{18}$.

CASE 10.—Philip H—, a collier æt. 23, married two years, no family. On April 12th, 1892, he was working at the coal face, getting down some "muck" from the top with a bar, in South Kirby Colliery, near Wakefield; part fell down, knocking the bar out of his hand, which sprang up and hit him on the right side of his forehead. He lost consciousness, and remembered nothing afterwards

until he found himself at the Clayton Hospital, Wakefield, where he remained a month as an in-patient, and then went home. The house doctor said if his eye did not get better he was to come back, which he did on June 21st. He then came to the Sheffield Royal Infirmary on the 24th. His eye was perfect before the accident, no squint. When he came to himself, that is nine days after the accident, he could not see with the right eye (he says not at all), and it was very much in the corner. It was very much swollen up. The eye has got gradually straighter, and he sees better every day. It has recovered as he looks to his right, but not to the left. V. $= \frac{2}{60}$. To look at, he has some convergence of right, and on looking to right side the right external rectus lags behind (paresis). I am indebted to Dr. Bone, the house surgeon at the Clayton Hospital, Wakefield, at the time H— was a patient there, for the following particulars as to his condition when an inmate of that institution :—Philip H— was admitted on April 12th, 1892, with a scalp wound corresponding with the right superciliary ridge. On exploration a fissured fracture of the skull was found. The orbit did not appear to be implicated. The eyeball was not protruded, and there was no subconjunctival ecchymosis. There was, however, considerable ecchymosis into the lids and surrounding parts. When admitted H— was suffering from concussion, but was not completely comatose. On the second day after admission the temperature, which had previously been normal, rose to 102°, and delirium and unconsciousness occurred. The wound did not do well, and we believed that meningitis had been set up. The temperature remained at about 102° for a week (till April 20th), and then, though it still rose to 102° or even 103° in the evenings, was normal in the mornings. Delirium gradually diminished, until on May 4th it ceased altogether, and from then the temperature was normal. A week afterwards the patient was discharged, *i. e.* on May 10th. The strabismus was first noticed five or six days after admission.

Case 11.—J. C—, æt. 52, was sent to me on July 1st, 1896, by Dr. F. J. Burman, of Wath.

On May 20th last, at 9 p.m., he was thrown out of his trap against a wall, striking the front of his head. He had had some whisky, but denies that he was the worse for drink—though some, he says, have alleged that he was. He became unconscious, and remained so until the next morning. Since then he has been well as far as his head is concerned ; the wounds soon healed. The left eye was never closed up ; he could open it the next morning when he awoke, and he noticed then that he could not even see light with it. There is a scar on the forehead at the left side, two inches long, and directed up and out. In the outer part of the orbital ridge is a small scar. There is no p. l., the optic disc is white, and already contrasts markedly with the right. The vessels are reduced in size. The motions of the eyeball are normal now. At the time of the accident hæmorrhage into the orbit probably interfered with the movements. There was, as far as can be ascertained, no sign of hæmorrhage in conjunctiva or lids at the time of the accident. No bleeding from nose or ear or other discharge. Sensation of conjunctiva and cornea equal on both sides. Dr. Burman considered there had been fracture of the skull, and that at first the eyeball was fixed ; a fortnight after the accident movement commenced, and at the time of his visit to me the eyeball moved normally in all directions.

July 29th.—His condition is unaltered, but the whiteness of optic disc is more pronounced.

Injuries to malar region.

Case 12.—In January, 1894, I saw in the York County Hospital, with Dr. Tempest Anderson, John B—, æt. 27, who had been kicked by a horse on November 23rd, 1893, on the lower border (malar bone) of the orbit. Sight was destroyed, and at the time of my seeing him the optic disc was atrophied. I understood that at an early period the ophthalmoscopic appearances had been *nil*.

Case 13.—William G—, æt. 19, was admitted as out-patient at the Sheffield General Infirmary on March 8th, 1895. About Easter, 1892, he was kicked by a horse on the right malar bone. He was unconscious for about twelve hours, and at the time of the accident there was considerable bleeding from the right nostril. He has never seen properly with the right eye since the accident. The left eye is now and has always been satisfactory. At present time (March 11th, 1895) there is a curved cicatrix over the right malar bone, about one and a half inches long, the result of the kick. His vision now is as follows:

V. { R. = $\frac{1}{60}$ − 3·5 D. = $\frac{6}{12}$.
{ L. = $\frac{6}{24}$ − 2 D. = $\frac{6}{9}$.

The right optic disc is white.

Case 14. *Injury to frontal and malar regions* (notes kindly supplied by Surgeon Lieut.-Col. Fishbourne, F.R.C.S.).—Bandsman P. C—, æt. 23, previously a healthy man, except for some old pleural adhesions, fell off barrack verandah on the afternoon of September 4th, 1893, a distance of twenty-four feet on to stone-flagged ground. His weight was 12½ stone, and on admission to military hospital symptoms of concussion of the brain were present, with a deep contused wound over the right frontal and malar eminences. There was considerable extravasation of blood around, and extensive swelling due to cellulitis rapidly set in over the whole of right side of face, neck, and head. The lids were both swollen, but on separating them extensive ecchymosis on outer side of globe was found, extending right up to cornea. Pulse was 60, slow; pupils dilated. He was at first cold and clammy, became "feverish" after reaction had set in. As soon as he quite recovered his senses intense pain in head was complained of, with cough, due to bruising of shoulder and ribs. As soon as the eye could be opened, it was found he could only see objects by throwing his head back and looking down. There was extensive effu-

Fig. 12.

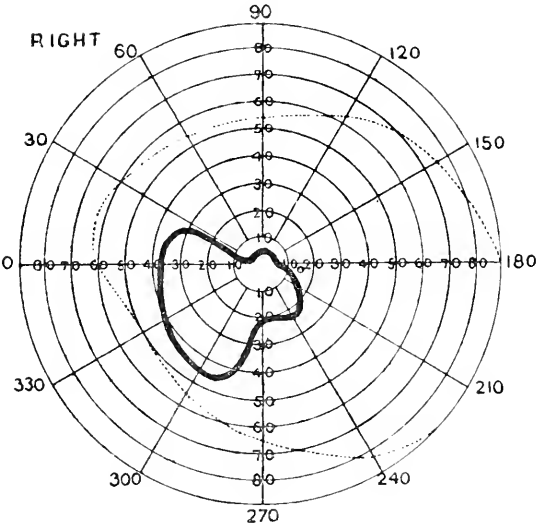

P. C—, February 19th, 1894.

sion of blood to the outer side of globe. Later the right optic disc became white. Dr. Fishbourne brought him to me in February, 1894, and at that time V. $= \frac{6}{60}$, and the accompanying field of vision was taken (Fig. 12).

Case 15. *Injury to right frontal region; blindness of left eye.*—Thomas W—, æt. 54, by occupation a collier. On August 22nd, 1894, he was working in Tinsley Park Colliery. He was stooping down removing a "fall" of roof which had fallen, with a view to setting props, when another "fall" occurred, striking him at the back of the head and pressing him right down to the floor. He lost consciousness, and remained more or less in that state for three or four days. He was admitted an hour and a half after the accident into the infirmary. The right side of the forehead was knocked in, and there was a wound at the right side of the eyebrow. There was a small wound at the base of the nose. No fracture of the frontal bone could be detected, although there was

distinct depression. When he recovered consciousness he found he was unable to see with the left eye, whilst before the accident sight was perfect. I examined him about three weeks after the accident, and found the optic disc pale, but not markedly so. He had no perception of light.

January 4th, 1895.—Came to-day as an out-patient. Now the left disc was white and the vessels small. No light perception. Pupil inactive. V.: R. E. $= \frac{6}{12}$. At the time of the accident, as far as can be ascertained, there was no bleeding from nose or ear. The left eye has somewhat the appearance of being prominent, but whether this is only apparent in consequence of the flattening on the right side is a little uncertain. There was loss of smell, and the fracture of skull must have there involved the ethmoid bone.

Case 16. *Injury to parietal region.*—On January 26th, 1895, I saw Mr. N— with Dr. Parkhill, of Church Gresley. The patient was a man aged about 33 or 35. On the evening of January 12th, *i. e.* fourteen days before, at about 6 o'clock in the evening he was driving a small pony carriage, and was run into by a spring cart and thrown out on the road-side. There was some amount of snow on the ground at the time, which probably in some measure broke the force of the fall. The cart and its driver went on their way, but some people came to his assistance, picked him up, and put him into the pony trap. He seems to remember nothing about his drive home, and thinks that perhaps the pony found its own way more than his driving it. On his reaching home Dr. Parkhill was sent for, and saw him within a short time. He was then more or less unconscious, and remained so until the next day. There were no marks of injury about the head except a slight superficial scratching at the upper part of the forehead or parietal region. There was no bleeding from the ear, but there was a good deal of hæmorrhage from the nose, especially the

left nostril. There were no marks of injury about the orbital region, forehead, or face. The left eyeball was protuberant, and there was some ecchymosis of the ocular conjunctiva, particularly below, and the ecchymosis was more marked on the next day. On regaining consciousness on the day following the accident the patient noticed that he saw nothing with the left eye, and it remained in that condition until the date of my visit.

On the 26th I found him up and in his drawing-room, but he had not been out of doors. He was quite collected, and gave me a clear account of the occurrence, but he had, notwithstanding, the appearance of a man who had not yet recovered from a severe upsetting. His memory was good, and pain in the head from which he had at first suffered had abated. He stated that he had seen nothing with the left eye since the accident. I found the pupil acting not at all, or only very faintly, to a strong light. Light perception was entirely wanting in all parts of the retina, except very faintly over a small area situated in the lower part. The optic disc was distinctly paler than its fellow, and the vessels were perhaps somewhat smaller, but not markedly so. There was no decided prominence of eyeball, and with the exception of a small patch under the conjunctiva below the ecchymosis had disappeared. Dr. Parkhill informed me that both these conditions had gradually subsided, and for some days the eyeball had resumed its proper place.

February 9th, 1895.—Dr. Parkhill writes under this date :—"Mr. N. keeps improving generally. It seems his memory never was good, but it is worse than ever now. No improvement in eye."

Case 17. *Injury to occipital region (and lateral parietal?).*—This case appears in the 'Transactions' of this Society, vol. xi, p. 136, and is mentioned here briefly as follows :

Harold H—, æt. 19, was sent to me by my friend Mr. W. Makeig Jones, of Wath-on-Dearne, and admitted

into the Sheffield Royal Infirmary on March 24th, 1891.

The following history was elicited :—On December 12th, 1890, he was working at the bottom of the shaft of a coal mine, and the cage, weighing five or six tons, had come down upon him, crushing him to the ground. "It spread him right out," as he says, first striking his head at the back, and then coming on to his shoulders, forced him on to his knees, and then pressed him on to the floor. Besides the injury to the back of the head, his face was crushed and bruised; one ankle was dislocated, right hip bruised, and back sprained. When he was forced on to his knees he put a thick piece of wood upright by his side, which supported the cage for a brief time; but this smashed, and the cage descended suddenly on him. "He saw flashes of light, and then lost consciousness."

When the cage was drawn up, and the lad was about to be removed, it was thought by those around that he was killed outright. He vomited many times, and gradually recovered consciousness, but he was perfectly blind.

He was taken, after being seen by a doctor, to the Barnsley Hospital. Mr. Sidney Barber, the house surgeon, tells me that he was only semi-conscious on his admission. His face was swollen considerably, and he was unable to open his eyes for several days. "The conjunctivæ were then deeply ecchymosed; the pupils were rather dilated, and did not react to light."

He was subsequently removed from this hospital, and placed under Mr. Jones's care. At this time, three weeks after the accident, Mr. Jones tells me there were no decided signs of whitening of the optic discs. He was afterwards for a short period in the Manchester Eye Hospital.

At the time of his coming to me the patient was perfectly blind—he had, indeed, been so ever since the cage had crushed him; both optic papillæ were white. Hearing, taste, and smell were good. He had some

feeling of numbness over the lower dorsal region of the spine, and had some pain in sacrum when sitting. There had been no paraplegia, and the movements of arms and legs were perfect. The friends state that at the time of the accident he had bleeding from both ears and the nose. Mr. Barber does not recollect this being the case on his admission to the Barnsley Hospital. His hearing is now good, but I have examined both tympanic membranes, and especially in the left I fancy I can detect scars resulting from rupture.

This case is an interesting one, owing chiefly to the loss of sight in both eyes. The fracture of the base was evidently forwards, evidenced by the bleeding from the nose and the effusion of blood into the eyelids and conjunctivæ. The injury in its course, either in implicating the optic canals or the body of the sphenoid bone, very possibly also tore through or damaged the optic nerves or the chiasma.

Case 18. *Injury to parietal region.*—John S—, æt. 57, a miner, married, was admitted into the Sheffield Royal Infirmary on September 16th, 1895.

On July 20th patient was working in the mine and got crushed between a corve and a "bas end," and was severely injured about the head. He was dazed, but did not lose consciousness at the time, and was able to get up and walk (with support) to the mouth of the pit, whence he was driven to the house of his medical attendant. There was no bleeding from ears or nose or other sign of fractured base. He was put to bed immediately after reaching his home, and his eyes were so much swollen that he could not open them. When the swelling subsided it was found that both eyes squinted inwards, the left eye more so than the right.

September 16th, 1895.—There is a large oval depression on the right side of the head, three inches long by two broad, having its longest axis antero-posteriorly. The lower edge is about a quarter of an inch above

the upper margin of the root of the ear, which corresponds almost exactly to the centre of the depression. The depth of the depression is greatest at the centre, and is about half an inch.

Vision in R. E. $= \frac{6}{12}$. L. E. V. $= \frac{3}{60}$.

Examination of fundus.—R. E.: disc pink; vessels full (?). L. E.: disc pale and vessels small, certainly in contrast with the other. Eye movements apparently unaffected except outwards, the palsy of the external rectus being about complete in each, but especially marked in the left eye. The position of both eyes is convergent. The left eye is usually more convergent than the right.

April 27th, 1896.—Vision in each eye $= \frac{6}{9}$. Left disc paler than right, vessels, if anything, rather smaller in left than right.

Callan* gives the following explanation for the foramen opticum being involved in the fracture:—"The frontal bone unites with the nasal, superior maxillary, lacrymal, and ethmoid bones by a continuous line of sutures until the lesser wing of the sphenoid is reached, and at this point the suture line bifurcates, forming an obtuse angle, and quite near the apex of this angle is the foramen opticum. The jar made by the blow would find its weak point along this line of sutures, and the first resistance would be at the bifurcation adjacent to the foramen opticum. The movement or jar could not follow both lines with equal force at and beyond the bifurcation, consequently the unequal strain would result in fracture of the bone into the foramen opticum, causing compression of the optic nerve and sudden loss of vision in the eye."

The instances I have related indicate, however, that injuries to the head apart from those affecting the anterior portion are also capable of occasioning the optic nerve lesion. It is interesting, therefore, to recall the line fracture is likely to assume in relation to the part struck. "Broadly speaking ('Treves' System of Surgery'),

* *Vide* former foot-note.

the direction may be divided into transverse and longitudinal. The fracture is nearly always parallel to the forces producing it, therefore in blows upon the side of the head the fracture of the base will be transverse, and according to the point of the application of the force it will be that one of the three fossæ nearest to the point struck. A transverse fracture seldom passes from one fossa to the other. In blows upon the frontal or occipital region a longitudinal fracture is produced, and this often involves the three fossæ." It is interesting to note that of the four illustrations given in 'Treves' System of Surgery' to show these lines of fracture no less than three involve the region of the optic foramen.

The cases related to-night except the first two, in which the injury to the optic nerve was direct through the orbit, are all characterised by symptoms of the following nature. The injury is followed by dizziness, or more usually loss of consciousness for a varying time; and when the senses are restored loss of vision is noticed. There may have been bleeding from the nose, mouth, or ear, but not necessarily. Proptosis may be present, as it was in at least two instances among those mentioned in this paper. The degree of swelling of the lids is variable, and may be absent. Ecchymosis in the region of the eyeball is, as is well known, common in fracture of the skull. It may result from direct injury, and the total absence of ecchymosis cannot exclude a basal fracture. "Thus, of twenty-three cases of fracture of the orbital plates of the frontal bone, in eight cases there were no traces of extravasated blood in either the eyelids or beneath the ocular conjunctiva, while in five cases the lids were alone discoloured. In the remaining ten cases blood was extravasated both beneath the ocular conjunctiva and into the lids. It will thus be seen that when these symptoms are present they are valuable aids to diagnosis, but that their absence is not conclusive in the other direction" ('Ashurst's Surgery').

In addition to the optic, the olfactory, the third, and

the sixth nerves have all been implicated in one or other of my cases. The instance in which the olfactory was affected was the case in which the injury was inflicted on the right lateral frontal region, but the loss of sight was on the left side, and the line of fracture being transverse would thus have involved the ethmoid bones and injured the olfactory bulbs lying thereon. The case in which the third nerve was implicated has been already discussed (Case 3, p. 85). Twice the sixth or abducens has been involved. In the first (Case 1) it was, no doubt, damaged by the pick point, when that implement penetrated the orbit and injured the optic nerve. The other (Case 18) was one in which the implication of the abducens was bilateral, and at first it was tolerably complete, but recovery took place entirely on the right side, and almost so on the other. In the same way the ocular condition improved. In the 'Archives of Ophthalmology,' 1894, Purtscher has collected the recorded cases of traumatic palsy of the abducens; several were bilateral, and out of the total of thirty-eight cases of palsy of the sixth, which were sufficiently explicit for the purpose, the optic nerve was also affected in no less than nine, or nearly a quarter.

In most of the instances mentioned in this paper the loss of sight has been complete, light perception being entirely abolished. There are some, however, which show that the rent of, or injury to, the nerve has not been so complete, and that a certain amount of vision has been retained. The fields of vision I have shown with Cases 6, 9, 10, 14, and 18 will illustrate this. In one instance (Case 16) there appeared to be an area in which perception of light was retained, whilst elsewhere it was abolished. The instance (Case 17) in which blindness resulted in both eyes is particularly interesting. It was discussed when brought before this Society on a former occasion ('Transactions,' vol. xi, p. 136). It demonstrates the possibility of a lesion being so extensive as to damage both optic nerves, or perhaps the chiasma. In this connection two illustrations of the line of fracture in 'Treves'

Surgery' are of interest. In one both optic foramina are apparently involved, and could account for a lesion of both optic nerves; in the other the line of fracture runs across the body of the sphenoid bone, and involvement of the chiasma could be thus explained.

A further point remains for consideration, and that is the medico-legal one. An individual meets with an injury to the head: there may be some loss of consciousness or not, and the general symptoms pointing to severe head injury may, or may not, be marked, but he asserts that he has thereby completely lost the sight of one eye. Examination with the ophthalmoscope only yields negative results. The lesson to learn from the cases I have related this evening is, I think, that one should be guarded in forming an opinion, and should recognise the possibility of the patient's statement being correct. This will be corroborated, if true, after a lapse of a few weeks (three or more) by the decoloration which will be noticeable in the optic papilla.

In a discussion at the American Ophthalmological Society after the reading of a paper by Callan on "Two Instances of Blindness from Trauma," like those related in this paper, Standish* mentioned two cases to prevent, as he said, some member giving a false opinion. Both were medico-legal cases, one a young woman, the other a young man who received an accidental blow on the head, and who declared that they were blind in one eye, and could see nothing with it immediately after the blow. In each of the cases there was a reaction of the pupil to light, and there was absolutely nothing to see in the fundus. He saw them both immediately after the injury at the instance of parties who were supposed to be responsible in each case. He said he believed they were malingering. To, as he says, his confusion and regret, in each case three or four months after the injury atrophy complete and perfect ensued, and the patients were absolutely blind.

* 'Trans. Amer. Ophthal. Society,' vol. vi, p. 178.

In conclusion it appears to me that it is advisable that the eye condition in head injuries should be more carefully examined than is perhaps usually the case, and that accurate post-mortem records should be obtained as opportunity occurs of all cases in which blindness has been caused. It has been pointed out by others that these fractures are very likely to be overlooked unless the dura mater is stripped, and the interior of the skull examined most closely. (*June 10th*, 1897.)

Mr. Bickerton remarked that an important practical point in connection with the paper just read by Mr. Snell concerned cyclists who might be members of accident assurance offices, and who might fall and injure their heads. He saw a cyclist recently, who had met with an accident to his head some six months ago. For that disablement a sum of £50 was received as compensation. A month before consulting Mr. Bickerton the patient found that the sight of the eye on the side on which the scalp was injured was failing, and during the month it continued to fail. An examination showed a white disc with contracted field, and there seemed little doubt but that the eye would become totally blind. Had this patient delayed closing with the insurance company, he would have received £500 instead of £50.

Mr. Critchett said the point had a medico-legal interest. He was called to give evidence in a case ten years ago, in which a man was struck a heavy blow just above the nose. The victim brought an action against the aggressor, and the patient was seen by the late Mr. Critchett, who found that vision had gone to twenty-seventieths. Twelve months after the injury vision was reduced to bare perception of light. The question which arose in court was whether double optic atrophy ever followed a blow upon the head. At that time Mr. Critchett searched all the authorities, but only found one case recorded, viz. in 'Holmes' Surgery.' He gave it as his individual opinion that the case was due to the blow,

and the plaintiff got substantial damages. It would be interesting to hear whether similar cases had occurred to other members, especially as Mr. Bickerton had alluded to the frequency of cycling accidents.

The PRESIDENT said he took it that there would be a great difference in the cases in which blindness followed immediately after the injury to the head, and was as a rule stationary, and those in which a considerable interval elapsed between the injury to the head and the failure of sight, and in which the loss of sight progressed steadily. In the first class the cause was clear enough; but in the second the relation between the injury and the failure of sight would be open to great difference of opinion.

Mr. LINDSAY JOHNSON said he would like to make an observation on the effect of blows on the heads of animals. He had had some experience in that line. Almost the only result of injuries to the head had been to create monocular or binocular blindness. He had seen one of the cranes in the Zoological Gardens, who could not see his way about, and found he had been pecked by his mate on the back of the head. Blindness in both eyes ensued three months afterwards. At Mr. Jamrack's request he saw a leopard, which had been conveyed to England in a very strong box. The animal had got frightened, and struck his head violently against the roof of the box. Shortly after arrival the pupils became insensible to light, and on ophthalmoscopic inspection he found that there was atrophy of both discs. The same happened to a bear and two kangaroos which he examined. It was interesting to note that severe blows on any part of the heads of animals might be followed by atrophy of the optic nerves. It was well known that animals recovered from ordinary injuries better than human beings, but they seemed to share the liability to optic atrophy from blows on the head.

3. DISCUSSION ON RETRO-OCULAR NEURITIS.

March 11th and 24th, 1897.

Opened by Mr. Marcus Gunn and Dr. Buzzard.

Mr. Marcus Gunn.—The circular distributed last summer defines with sufficient accuracy the nature of the cases which the Council have invited us to consider this evening. "The discussion," it says, "will be limited chiefly to forms of optic neuritis (with or without papillitis) caused by local disease, such as periostitis in orbit or optic canal, gumma, or other focal inflammation or growth upon the nerve, in the forms of idiopathic neuritis (with or without papillitis) of one nerve or both, which occur after infective diseases (for example, influenza), in the course of disseminated sclerosis, or without any apparent cause."

The group reserved for our consideration is a wide one, with an ætiology most varied and often obscure, including cases that cannot be recognised by the usual objective examination, yet a group sufficiently distinct in its clinical characters. *Rapid failure of vision, usually in one eye only, often accompanied by pain and tenderness in the neighbourhood, absence of early ophthalmoscopic changes, and a tendency to recovery* are the usual prominent features.

It will be observed that all these positive symptoms are subjective, and consequently liable to be simulated in cases of hysterical amblyopia. The necessity of distinguishing between them is evident, and the opportunities for differentiating them are rendered frequent, because hysterical amblyopia is also usually one-eyed, and we shall later have to consider the liability of a certain class of patients to both forms. Fortunately we can appeal, in such circumstances, to the character of the reaction of the pupil to light. It is a well-recognised fact that in true functional amblyopia the pupil acts perfectly, while

in optic nerve affections its reaction is impaired. The observation must be made with care, for it is only in very marked degrees of amblyopia from this cause that the pupil fails to act moderately well. But even in slight cases, where the first contraction in the amblyopic eye seems perfect, there will be found a difference in its failure to *maintain* the contraction under continued direct exposure to light, when compared with the other eye examined in a similar way.* Other refinements of such observations on the pupil it is unnecessary to mention here. But when both eyes are amblyopic, and the pupils still act fairly well to light, there may be occasionally room for doubt as to whether there is any real impairment of their reflex movement. We are then able, usually, to judge the nature of the case by the character of the amblyopia.

There is another less definite class of cases also liable to be confounded with retro-ocular affections that we must notice in passing. In these there is also a one-eyed failure of central vision, often without any definite ophthalmoscopic cause. The differential diagnosis is most difficult, but I may mention as common in this latter disease the absence of associated pain, possibly a history of recent exposure to excessive light, micropsia, sometimes positive scotoma, while, though no changes may be visible at first, later we see some œdema and light-coloured spots in the macular region, and we do not get the pallor of the optic disc associated with retro-ocular neuritis in a late stage. In fact, this form of amblyopia is due to an affection of the retina, and not of the optic nerve, and is allied to the central retinitis due to looking directly at the sun without proper protection.

Occasionally, in cases of retro-ocular neuritis, the

* The complete observation on the pupil in light and shade may conveniently be said to show its *behaviour* to light. After its first contraction to light the pupil normally dilates very slightly, and not infrequently oscillates a little. Its behaviour in all respects should be carefully noted and compared with its fellow and also with its own behaviour consensually.

papilla is involved in the inflammatory process, and not uncommonly both nerves are affected, so that we may have a condition ophthalmoscopically like an ordinary neuritis associated with intra-cranial disease. As a rule in such retro-ocular cases, however, the optic disc changes are not gross, there is orbital pain or tenderness, and there is an absence of other symptoms of intra-cranial disease. But the chief difference between the two forms of optic nerve inflammation lies in the behaviour of the nerve-fibres as regards their conducting power, and in the resulting condition of the optic disc. We are all familiar with examples of papillitis—from intra-cranial syphilis, or from anæmia, for example,—where the ophthalmoscopic signs persist for weeks, and finally pass off without any appreciable loss of vision; and we may have watched, in such cases, the swelling subside and the disc margins again become visible, until at last we can detect no certain ophthalmoscopic trace of the past inflammation. Again, when vision is affected in papillitis, it is usually after some considerable time,—indeed, the chief loss commonly accompanies subsidence of the inflammation; the order in which the fibres are attacked—that is, the loss of field—varies very greatly, and if visible atrophy occurs, it involves any part or the whole of the optic disc. On the other hand, in the retro-ocular form of neuritis vision fails very early, and is nearly always most affected centrally. It usually improves greatly as the neuritis subsides, and, however thorough the restoration of vision may be, the optic disc practically always retains ophthalmoscopic evidence of the past attack, in the form of pallor of the outer half.

If we inquire what difference in the pathological processes in these two great divisions of optic neuritis will account for the different effects on the conducting power of the fibres, I think we may consider as of first importance the part of the nerve mainly involved in the two forms. In *papillitis* we see how great the swelling

is which takes place in the nerve-tissue where it has little pressure to overcome, a swelling not unfrequently amounting to 2 mm. in height, *i. e.* more than the diameter of the intra-ocular end of the inflamed nerve. The very intensity of the swelling, indicating an absence of much resistance from without, is in some respects, and at a very early stage, an element of safety, preventing undue pressure on the exposed axis-cylinders. Later, it is true, the large amount of fibrino-serous exudation that has in severe cases been permitted to filter between the unprotected nerve-elements, is liable to lead to disastrous consequences when it gradually organises into fibrous tissue, constricts the nerve-fibres, and produces the white disc of consecutive atrophy. In fact, the intensity of such forms of optic neuritis can be estimated usually by the examination of the papilla itself, and the ultimate ophthalmoscopic changes accounted for by the inflammatory processes manifest with the ophthalmoscope. According to the pathological investigations of Edmunds and Lawford, in the optic neuritis due to intra-cranial disease and to head injuries, the inflammatory process seems to travel along the pial sheath until it reaches the intra-ocular end of the nerve, where the intensity of the neuritis is first shown. Occasionally, it is true, the whole trunk is involved, but this more general optic neuritis occurs later.

In *retro-ocular neuritis* there is reason to believe that the intensity of the inflammatory process frequently affects the part of the nerve lying in the optic canal. We do not, in this case, have so much exudation, because the unyielding bony wall does not permit of great swelling, but we rapidly get a degree of pressure on the nerve that will vary in different cases according to the intensity of the inflammation and the narrowness of the canal, and which will directly interfere with conduction. As the inflammation subsides, and the pressure is removed, there will be a tendency to the restoration of function, unless the axis-cylinders have meanwhile

sustained irreparable damage; there is not the same liability in this case for them to suffer during the stage of subsidence, as there has been less exudation, and consequently there is less fibrous formation, and as they are, to some extent, protected by their own anatomical surroundings. Similarly, a localised inflammation of any other part of the nerve behind the scleral aperture, *i. e.* any true retro-ocular neuritis, will not be accompanied by free œdematous swelling, on account, mainly, of the tightness of the pial sheath; and the same early pressure-interference may be anticipated as in the case of inflammation at the optic foramen, though to a less degree.

Why should visual failure in acute retro-ocular neuritis so frequently take the form of a central or nearly central scotoma? That it does so is undoubted, even in cases of varied ætiology, so much so indeed that it constitutes the most prominent symptom, and is one of the clinical features relied upon by the ophthalmologist in distinguishing this class of optic nerve lesions. It often, at least, takes the form of an absolute scotoma, which is surrounded by an area in which colours are not recognised, the perception of red and green being chiefly involved. Occasionally, in slighter forms of the affection, the central defect can only be demonstrated for these two colours. It will be granted that the visual loss is due to interference with the conducting efficiency of the nerve-fibres, and that the presence of localised loss of perception of red and green presents the most delicate test that we know clinically of interference with that efficiency. From the pathological investigations of Samelsohn, Nettleship, and others, we have distinct evidence that the fibres associated with central vision—the optico-macular group—travel at first in the outer segment of the nerve, but soon reach a median position, which they maintain (as the axial fibres) in the rest of their course to the chiasma. They would thus seem to be the most protected in the nerve-trunk as it passes through the optic canal, and yet, clinically,

they are those that apparently principally suffer. In explanation of this apparent anomaly, I would suggest, *first*, that the optico-macular fibres are the most active physiologically in conduction, and that, consequently, they will undergo most rapidly the normal degenerative changes associated with action. Under altered conditions of pressure, and an abnormal character of the surrounding material, the necessary regenerative processes are performed imperfectly or not at all, and consequently they become incapable, temporarily, of performing their function, and may break up permanently if not timeously relieved. *Secondly*, it is asserted that the principal lymph-current of the optic nerve flows about its centre. While this is doubtless advantageous in a healthy state, it would further predispose the axial fibres to suffer during a pathological process. In addition, it may be remarked that the optico-macular fibres occupy a relatively large area in the nerve-trunk, and that a slight interference with their function is easily recognised.

As to the expressions used by the patient to describe the first loss of vision, I would refer to the communication on retro-ocular neuritis to this Society by Nettleship in 1884, and to the work of Uhthoff on this subject. One of my patients—a very severe case of retro-ocular neuritis—noticed, along with the first failure of vision, a subjective appearance of colour, described as violet or reddish pink, presumably due to an early irritation of the nerve, but this is quite unusual. Occasionally, along with the central loss, there is a slight peripheral, concentric contraction as well.

Sometimes central vision does not fail first, and we may then have localising characteristics. For example, in a case probably of syphilitic disease of the periosteum of the body of the sphenoid bone, the outer part of the right field first failed, and the dimness gradually crept inwards for four days over the field, until this eye became quite blind, or had the barest perception of light. A

week after the beginning of the failure in the right eye the left behaved similarly,—the dimness also here creeping gradually over the field from without inwards for three or four days. In both the failure was accompanied by orbital pain. The left eye recovered with a paracentral colour scotoma.

Sometimes the upper or lower part fails first;—"When I look at a green field, the part a little beyond the place I am looking at is of a brownish green," is the account given by one patient of failure of this sort.

(In speaking of this subject I should like to protest against the way in which the visual field is often described and examined. On reading reports of cases one finds the expression "visual fields perfect" often used to mean that there was normal peripheral vision for white. Then, in examining the visual field, there ought to be standard sizes of objects used; delicate examinations of peripheral vision cannot be made with a large test object, while all coloured tests should be carefully chosen as to purity, brightness, and size.)

From the direction of movement of the eye that causes most pain or is alone painful, Hock believes that we can indicate the part of the field involved, the pain on movement being due to stretching of the optic nerve sheath. Thus, if upward movement is most painful, the upper part of the visual field shows loss or altered colour perception, the retinal centre only slight modification of function, and the upper parts of the retina remain normal. If, later, pain occurs on movement inwards, we get decided loss of central vision; usually the nasal part of the field remains normal longest or remains unaffected. Recovery in such cases is in the reverse order. He gives three cases in support of his statement, all, he says, due to "chill." Recently I have seen a case that did not at all correspond with his rule in its onset, and I do not think it is often possible to substantiate his statements. Looking outwards in this instance caused most pain, but the nasal field was most affected, though

certainly there was decided loss of central vision also; the papilla showed evidence of inflammation, so that presumably the seat of the affection was in this neighbourhood.

The amount of amblyopia varies very greatly in different cases. There may be absolute blindness for a time in the most severe forms, and, on the other hand, complaint is made of dim sight occasionally, even though there is $\frac{6}{6}$ of vision. Between these extremes there are all degrees of amblyopia. In the very slight cases just mentioned, where V. may still $= \frac{6}{6}$, the test letters are read slowly and with difficulty, and we can always find a colour scotoma at or near the fixation-point.

Visual acuity in retro-ocular cases is worse in a bright light, and excessive light soon leads to further temporary deterioration, probably from the physiological degeneration so induced in the ill-nourished axis-cylinders. From a similar cause vision becomes worse after prolonged work, even in a moderate light, and also after exhaustion, as from want of food. On the other hand, it is said to be better on first getting up in the morning, the prolonged rest having had a beneficial effect. How far such differences in vision, according to the illumination, in these cases may be due to interference with the function of the somewhat hypothetical centrifugal fibres of the optic nerve, namely, those that are concerned in regulating the movements of the retinal cones, we have as yet no means of judging.

Occasionally complaints are made of seeing objects as through a moving haze, like that seen on a sunny day near the ground, and the patient reads the distant test-types very slowly, saying that his difficulty is due to the letters moving, or "something that keeps moving." Now, in retro-ocular affections, the first pathological change seems to be the breaking up of the medullary sheath, leaving the axis-cylinders exposed, or nearly so. Similar changes occurring in insular sclerosis have been supposed by some to account for the tremors on attempted

movement, from imperfect insulation of the axis-cylinders, the current escaping from one to the other. If this be true, perhaps this shimmer described may be explained in the same way. But another explanation is possible, namely, that some of the axis-cylinders, though able to conduct momentarily, are soon exhausted, and the alternate action and loss of function of contiguous fibres, as they are earlier or later exhausted, lead to confused perception or confused movements from the irregularity of the stimulation forwarded and received.

In some cases there is a curious dislike to certain colours. Thus one patient said that she did not like red, another that she could not bear to look at anything blue, even a blue book on the table. This latter patient had very little vision left. It may be remarked that both were women.

As to the light sense in these cases, I would refer to an excellent paper on this subject by Berry, in vol. ix of the Society's 'Transactions.' He examined the light difference sense by Bjerrum's types in these and other cases, and found it markedly deficient in retro-ocular neuritis. This is probably due to the imperfect and irregular conductivity of neighbouring fibres, so that the difference in the central impressions obtained is no longer dependent on the amount of stimulus, but largely and irregularly on the difference in the conducting power of individual fibres.

The optic nerve is undoubtedly particularly prone to disease. It may be argued that its special susceptibility is only apparent, namely, because we can so readily recognise its ailments ophthalmoscopically and functionally. But this will not suffice as an explanation. Its liability to suffer is unquestionably associated with its double character;—as an outlier of the central nervous system it partakes of the susceptibilities of this system, and at the same time it has the exposures of a peripheral nerve.

In the former aspect we recognise how the meninges are prolonged around it throughout its entire course in

the optic canal and orbit; we observe the arrangement of its fibres in the spaces of a connective-tissue meshwork where they are surrounded by lymph and neuroglia; and lastly, there is the important peculiarity, which seems to have been insufficiently recognised, that its medullary sheath is unprotected by primitive sheath or neurilemma. As a peripheral nerve it first passes through a narrow bony canal of considerable length, and then enters the orbit, where it is in relation to cellular tissue, fibrous membranes, and muscles.

(i) I shall first consider its liability to suffer from inflammation communicated to it by neighbouring structures.

In the last part of its course the optic nerve may be attacked during an *orbital cellulitis*, arising from local injury, or by the extension of erysipelatous or other inflammation from adjacent parts. Sometimes an orbital cellulitis seems to follow great exposure to cold. Occasionally, again, a very severe form of cellulitis is associated with a general septicæmia, possibly due to thrombosis of the ophthalmic veins. Both orbits and both optic nerves may be affected simultaneously. In this class of cases there is often later distinct ophthalmoscopic evidence of the optic nerve having been affected at or near its intra-ocular end, in the character of the optic disc atrophy, changes in the central vessels, and the presence of associated retinal atrophy. This type of neuritis is very severe in its effects. *Orbital periostitis*, accompanying local disease of bone, or spreading from the upper jaw or nasal cavities, is liable to involve the optic nerve, probably by invading its outer sheath, where it and the periorbita are continuous at the optic foramen. To this class probably belong cases of alveolar abscess where complaint has been made of tenderness over the cheek, extending to the orbit, and sometimes accompanied by slight prominence of the globe and pain on pressure. Such an inflammation may readily gain the orbit by the spheno-maxillary fissure. The character of the neuritis varies, though the usual form is severe; occasionally

excellent vision is ultimately regained where there was reason to believe that the inflammation was of this nature.

In its passage through the optic canal, about 1 cm. in length, the nerve is exposed not only to inflammation extending to it from the bony walls and the periosteum, but also from the sphenoidal sinus, only separated from it here by thin laminæ of bone, which may be imperfect. It is probable that a considerable number of the cases of retro-ocular neuritis traced to exposure to cold are examples of inflammation attacking the nerve in this part of its course. Both nerves are often affected at the same time, or almost simultaneously. They are not usually associated with early changes at the optic disc, but later there may be slight or moderate papillitis, and finally there is well-marked pallor. Vision is greatly affected at first, but there is a tendency to recovery, though this is rarely complete. The periosteum in this locality seems to be often the seat of syphilitic disease. We know less of the cases due to disease of the sinus, but there appears to be no doubt that such occur, although the diagnosis is always obscure. An instance of this disease has been recently published by Holmes. There was no positive proof of the sphenoidal sinuses being involved, but he opened the cavity, and two days later there was a discharge of thick creamy pus, followed by relief of pain and gradual restoration of vision, a central colour scotoma alone remaining. Cases where retro-ocular neuritis occurs secondary to disease of the nasal mucous membrane are possibly of this nature,—as, for example, in a patient shown here in 1884 by Brailey. Sandford also exhibited a specimen before this Society three years ago, showing the condition of the skull, with caries of the walls of the sphenoidal cells, where there had been double optic atrophy.

Messrs. Edmunds and Lawford, in a communication to this Society on the condition of the optic nerves in intra-cranial disease, described one case that is of im-

portance to us now. A young man was admitted with a history of recent blindness of one eye, without ophthalmoscopic change. At the autopsy a growth was found starting from the base of the skull and invading the nostrils, but not pressing on the optic nerve. The left optic nerve was markedly inflamed, especially that part of it near the optic foramen. The inflammation was not uniform throughout the section, but most marked in a patch near the centre; and was accompanied by some degeneration of nerve-fibres. There was meningitis at the anterior part of the base. Here we have a most important observation, and it would be interesting to hear if the authors regard it as likely that the inflammation had spread through the sphenoidal sinus to the adjacent meninges.

Cases of retro-ocular inflammation at the optic canal may be compared with those numerous instances of inflammation of the portio dura in its bony canal, many of which are attributed to cold or rheumatic inflammation of the sheath; some are due to an extension of inflammation from a neighbouring cavity; while in other cases recurrences have been observed associated with toothache, as in one recently published in the 'Lancet.'

In this connection I may refer to the paper read here by Spicer and Ormerod on recurrent paralysis of ocular nerves, accompanied often by sickness and severe localised headache, attacks thus resembling migraine. Changes in vascularity in the position of an old local lesion near the body of the sphenoid may account for an occasional loss of function in the optic nerves also. Not long ago I saw a very obscure case that might possibly be of this nature. There had been recurrent attacks of severe pain with temporary amblyopia in the left eye accompanied by vomiting since early childhood, each attack lasting for twenty-four hours. In several other cases there have been symptoms indicating some such relationship, and in one of those included in the paper referred to there was a question of retro-ocular neuritis having occurred.

(ii) In the next place I may consider forms of retro-

ocular neuritis from local manifestations of a general disease.

The optic nerve seems sometimes to be the seat of syphilitic gumma or of tuberculous deposit. Again, the sheath of the nerve, possibly in any part of its course, but apparently most commonly near its junction with the sclerotic, is liable to be affected occasionally by inflammation of a gouty or rheumatic character, as has been insisted on particularly by Hutchinson.

In 1882 Brailey described appearances in an optic nerve on section that suggest an old gumma, and Juler showed a case here that he judged to be of this nature. The usual way, however, in which syphilis causes retro-ocular neuritis is doubtless by affecting the periosteum of the optic canal.

Tubercular deposit at the chiasma is not uncommon, and it may affect the optic nerve in this vicinity. Are there any instances of its having been found in the nerve after leaving the intra-cranial cavity ?

A history of well-marked gout is so common in retro-ocular neuritis that there is every probability of this form occurring not infrequently. In many of these I have observed a very marked tendency to recurrence, as we might perhaps have expected. In one case there were no fewer than six attacks, five in one eye and one in the other. In several of these cases other nerves were affected (sciatic and portio dura), but there is a doubt in some of these (?) gouty recurrent cases, whether they were not really due to insular sclerosis. In this connection I would ask if there are any grounds for believing that insular sclerosis itself is associated with gout.

(iii) This introduces us to another series of cases of retro-ocular neuritis where the optic nerve suffers seemingly as part of the central nervous system.

It has for a good many years been known by neurologists, that in insular sclerosis there is a tendency to get optic nerve changes, and also to get a great loss of vision without marked ophthalmoscopic signs. It came gradually to be

recognised that, as regards the appearances of the optic disc, and the character of the visual loss, there was a great similarity between certain cases of insular sclerosis and ordinary acute retro-ocular neuritis. In other cases of insular sclerosis, on the other hand, the gradual failure, the tendency of both eyes to be attacked at or about the same time, and the central scotoma, suggest their affinity to ordinary toxic amblyopia. With this latter class I became acquainted soon after beginning work at the National Hospital, and at first, from my previous training, regarded them as due to tobacco, but was sometimes unable to get a history of any excessive use, if of any use at all, of this or any other recognised nerve poison.

The ætiology and pathology of insular sclerosis are both obscure, but I believe the opinion advocated strongly by Marie, that the determining cause is the presence in the blood-vessels of some irritating agent due to an infective process, is held as probable by many of our neurologists. It is certainly worthy of note that one of the forms in which the optic nerve is liable to be affected in this disease corresponds so closely with the familiar toxic amblyopia.

[That the loss of vision in so-called toxic cases is really due to the actions of certain poisons—for example, tobacco —is granted universally, I think. But I believe there is still a doubt expressed by some as to whether the amblyopia is really due to optic nerve or to more central changes. But surely the pathological changes now, on several occasions, found associated with the usual symptoms of toxic amblyopia, are undoubtedly the anatomical basis of these symptoms. That such changes would account for the visual loss and for the ophthalmoscopic appearances is certain, and the burden of proof must now rest with those who deny this relationship, in that they should produce optic nerves without the described changes from a case of toxic amblyopia, that they otherwise explain the pallor of the outer part of the optic disc, and

that they also account for the central scotoma, and for the fact that vision in these cases is worse in bright light.]

It is possible that we have, in these two forms of retro-ocular neuritis, here both associated with disease of the central nervous system, instances of the behaviour of the optic nerves to what may be called two modes of infection. The chronic, usually gradual, bilateral form, similar to what occurs from chronic poisoning by tobacco, &c.; and the acute, often unilateral, rapid form, from gross localised lesion, such as we get in rheumatism and gout, syphilis, after some fevers, and perhaps in influenza.

The chronic form is very probably a true primary change in nerve material; in the same great class we may rank the so-called toxic amblyopia, this modification of optic nerve affection in insular sclerosis, lead palsies, the nerve changes associated with Argyll-Robertson pupils, post-diphtheritic paralysis, and possibly the changes in tabes itself. In certain families we have an inherited tendency to suffer from or to develop toxic disturbances of this kind, and all weakening influences increase the liability in a similar way. The effect of shock is often marked, probably acting either by depressing vitality and interfering with the elimination of some introduced poison, or by actually giving rise to a toxic product by disturbing digestive or secretory processes.

In the acute form the nerve substance is involved *secondarily*, by a local deposit of infective material, or local irritation by an infective process communicated from the blood-vessels. It may be noticed in this connection that the changes found in the optic nerves in insular sclerosis are very similar if not identical with those found in other parts of the central nervous system in this disease.

Ophthalmologists in this country have been aware of the occasional occurrence of symptoms of insular sclerosis in cases of retro-ocular neuritis, but their attention has been directed afresh to this relationship by Dr. Buzzard, in a paper read before the Ophthalmological Section of the British Medical Association in 1893, and particularly by

the sentence with which he concludes: "Are not many of the cases of retro-bulbar neuritis of ophthalmologists really examples of the 'hysterical' form of disseminated sclerosis, the type in which, in its early stages, the characteristic symptoms are either entirely absent or but very feebly expressed?" The question has been considered statistically by Uhthoff, who found only five cases of insular sclerosis in sixty-six cases of true retro-ocular neuritis. It is probable, however, that a larger proportion than this is, properly speaking, of this nature. Insular sclerosis seems to vary very greatly in its progress, and occasionally has very limited and localised signs of existence; indeed, even these signs may perhaps disappear, and no fresh advance be made for years, if at all. It is understood that the optic nerve changes sometimes precede all other symptoms. Under these circumstances we may be justified in diagnosing the disease from optic nerve failure, without any cerebro-spinal evidence, just as we may regard certain forms of optic atrophy as tabetic in clinical association, although unaccompanied by absolute signs of this disease. But the difficulties here are great. We must exclude other causes of the retro-ocular neuritis, and these may exist and yet be far from obvious.

That there is some connection between hysteria and insular sclerosis—at least that in an early stage of the latter affection we frequently get functional symptoms—is, I understand, believed by neurologists. Among these functional symptoms, hysterical amblyopia occurs not infrequently; and just as functional loss of power in a limb may be a precursor of a real central affection involving its nervous mechanism, so a functional amblyopia may be the prelude to, or occur in the course of, a true optic nerve disease. In one case of insular sclerosis at the National Hospital under Dr. Hughlings Jackson, who has kindly permitted me to make use of it, a man aged thirty-seven had almost recovered from double amblyopia. A year or so later he one day accidentally ran a needle into his finger; next day he was so blind that he could just see the window

in his room, could recognise nobody; but four days later this passed off, and he was able to read again.

But this difficult part of our subject—the connection between retro-ocular neuritis, insular sclerosis, and hysteria—I need not further refer to, and leave it in the able hands of one who has done very much to elucidate it.

Note on histological pathology.—The results obtained almost simultaneously and independently by Nettleship and Samelsohn are so well known that I need only mention them here. These results concern our subject very closely, serving, as they do, to exhibit pathologically the changes associated with central scotoma. In the affected strand these changes are described as atrophy of the nerve-fibres, increase of the nuclei, thickening of the trabeculæ, and of the walls of the small vessels. The increase of nuclei in Nettleship's case was most marked towards the apex of the orbit; the thickening of the trabeculæ and of the vessel walls, on the other hand, was most marked in front of the entrance of the central retinal artery. Edmunds and Lawford found very similar changes, but seemingly more advanced. In the drawing illustrating their observations, and in a microscopical preparation that they have kindly lent us this evening, we may observe also marked dilatation of the small vessels corresponding to the affected area of the nerve. In another communication by the same authors they describe the examination of the optic nerves in a case of chronic alcoholism, with peripheral neuritis affecting the musculo-cutaneous nerves of both legs. The patient had also been a heavy tobacco smoker. A transverse section of the optic nerve, near the optic foramen, showed a large area of disease in the centre, implicating nearly all the nerve bundles. A preparation of this nerve I am also able to show you this evening, owing to their courtesy.

In insular sclerosis there seems, from Uhthoff's examinations, to be early increase of the neuroglia elements, with much increase of nuclei; the larger septa and

the pial sheath may be later involved by these active processes. As regards the fibres themselves, the medullary sheath breaks down comparatively quickly, leaving the isolated or slightly sheathed axis-cylinders to persist for a much longer time. Near the blood-vessels he finds decided pathological changes. The condition in the optic nerve would therefore appear to be identical with that described in the central nervous system in this affection.

The pallor of the disc subsequent to retro-ocular neuritis does not necessarily mean atrophy of the optic nerve-fibres, but may be due to increase of connective tissue secondary to lymphatic obstruction.*

Dr. Buzzard.—The process by which disorder of vision, usually accompanied by some amount of atrophy of the optic disc, is caused in cases of insular (disseminated) sclerosis would appear to be most commonly a form of neuritis, which involves a very varying proportion of that division of the optic nerve which lies behind the globe.

The remarkable frequency of some atrophy of the optic nerve in cases of insular sclerosis has not been adequately appreciated until in quite recent times. Although its occurrence was pointed out by Charcot and succeeding writers, no great stress appears to have been laid upon the symptom, which was, there can be little doubt, frequently overlooked, because in many cases it is not strongly expressed, and has distinctly to be sought for. Important contributions on the subject have, however, it will be remembered, appeared in the Society's 'Transactions' from Mr. Nettleship, Dr. Sharkey, and others.

My own interest in the symptom commenced some fifteen years or more ago, when I began to be frequently called upon to examine patients, for whom the Weir-Mitchell treatment had been advised in consequence of their being supposed to be suffering from hysterical or functional

* Mr. Gunn has deferred the publication of records of his cases of retro-ocular neuritis.

disorder. On careful examination with the ophthalmoscope, as a matter of routine, I was surprised at the number of these cases in which there was some amount of atrophy of the optic disc, usually accompanied by more or less disorder of vision. The symptom at once became a very important one for diagnostic purposes, as the presence of even a slight amount of atrophy appeared in my judgment to afford evidence that the patient was not simply suffering from a functional disorder, and I examined for it with great care in all cases of apparently similar character which came under my observation both in hospital and private practice. In a Presidential Address to the Neurological Society delivered in January, 1890, I drew attention to the remarkable frequency of visual disorder in insular sclerosis, and referring in some detail to twelve cases, pointed out that in four of them there was more or less atrophy of disc, in one a dark red discoloration of a disc, and in two a history of loss of sight in one or other eye for varying periods, followed by recovery. At that time I did not know that the frequency of visual disorder in insular sclerosis was elsewhere attracting attention, and it was not until 1892 that the extremely important work of Uhthoff came under my notice through quotations introduced by Pierre Marie in his book.*

In a paper read in the opening of a discussion in the Ophthalmological Section of the British Medical Association, at its Annual Meeting, held in Newcastle-upon-Tyne, August, 1893,† I again took up the subject, and quoted figures from personal observation of cases which were in striking correspondence with those previously published by Uhthoff.‡ In 100 cases of insular sclerosis Uhthoff made the following ophthalmoscopic observations.

* ' Leçons sur les maladies de la Moelle,' 1892.

† "Atrophy of the Optic Nerve as a Symptom of Chronic Disease of the Central Nervous System," ' Brit. Med. Journ.,' Oct. 7th, 1893.

‡ "Untersuchungen über die bei der multiplen Herd-klerose vorkommenden Augenstörungen," 'Archiv f. Psych. u. Nervenkrankh.,' Berlin, 1890.

In three there was pronounced atrophy of the optic nerve (in two of these binocular; in one there was, along with pronounced atrophy of one, pallor of the temporal half of the other disc).

Nineteen times there was incomplete atrophic decoloration of the whole papilla (of these eight were monocular, seven binocular, whilst four were monocular along with pallor of the temporal half of the papilla of the other eye). In eight of these nineteen cases there was no essential visual disorder.

In eighteen cases there was partial atrophic decoloration of the temporal portion of the papilla, like that which is frequently seen in toxic amblyopia, and in six of these cases no disorder of vision was recognisable. In five cases there was optic papillitis. In three of these the changes in the disc were very pronounced, in two of trifling degree. Vision was disordered in four of these cases.

In forty-eight cases the ophthalmoscope showed no change, but in five of these, nevertheless, there was disordered vision, and in one anatomical changes in the optic nerve were found post mortem.

In my Newcastle paper it was mentioned that I had found more or less pallor of one or both optic discs in forty-three out of a hundred cases of insular sclerosis. My subsequent experience, which has been considerable, but with the details of which I will not detain the meeting, has amply confirmed the existence of this large proportion; indeed, the relative number of cases in which some amount of atrophy has been found to exist is even larger than that contained in my previous record.

In general terms it comes to this, that in something like 50 per cent. of cases of insular sclerosis we may expect to find pallor of one or both optic discs, denoting some amount of atrophy (or a red-grey injection of the disc referable probably to an anterior stage), or, in the absence of these appearances, we shall hear that the patient on one or more occasions has suffered from some amount of

amblyopia for a period varying in duration from a few days to some weeks or months.

Leaving for a moment the disorder of vision, let us turn to the general features of the disease in question. In a typical case of insular sclerosis the following symptoms, or at least most of them, will usually be found present, and there should be no difficulty in forming a correct diagnosis. More or less loss of power, especially of the lower extremities, with spasticity, great exaggeration of the tendon-reflexes, and ankle-clonus. There is often a general tremor when the patient attempts to stand. The gait, when the patient is able to walk, is staggering, with a suggestion of stiffness in the legs. Sometimes it recalls so much that which is characteristic of tabes dorsalis, that mistakes in diagnosis may be made. The exaggeration in the knee-jerks, however, contrasting with their absence in the latter disease, should preclude the persistence of an error in this direction. When an attempt is made to use the hands (or one of them) there is sometimes so much rhythmical tremor that the contents of a glass of water will be spilt in an endeavour to carry it to the mouth. When the movement is desisted from the arm remains still. As the disease progresses this symptom may disappear. The patient may complain of "pins and needles," "deadness" or "numbness" of the limbs, sensations of "coldness;" occasionally also pains in the limbs are described. Sometimes there is anæsthesia or hyperæsthesia, but affections of common sensibility are not usually marked in any considerable degree. Occasionally there is muscular atrophy, with loss of faradic excitability, in one or more limbs. Nystagmoid movements of the eyeballs are of very frequent occurrence. More or less loss of power in one or more of the external muscles of the globe may either be present, or form part of the history. There may be incontinence of urine or fæces. Occasionally, but much less frequently than is commonly supposed, the articulation is marked by a peculiarity to which the term "scanning" is applied. Other troubles

referable to lesions in the bulb may also occur. Very often indeed there is mental dulness with a tendency to senseless laughter, or a condition of *bonhomie* quite out of character with the patient's distressing condition. Apoplectiform or epileptoid attacks may occur. Vertigo and diplopia figure very frequently in the history of the disease. Its march may have been tolerably steady and rapid, sometimes only embracing a few months, or may have been marked by slow progress extending over very many years.

So much for the general symptoms of what may be termed the "typical" form of insular sclerosis.

But there is a form which is of extreme importance, especially in reference to the subject under discussion, from the fact that the patient is regarded perhaps for years as simply an example of "hysteria," and the serious organic disease underlying the hysterical symptoms is very frequently indeed overlooked.

In this, which usually but not invariably affects the female sex, there is often a history of moral or physical shock, which has been followed by loss of power in one or more limbs, or there may have been aphonia, or convulsive seizures, and very frequently an alteration of manner is described of the kind which is termed hysterical.

In this form of insular sclerosis the most characteristic symptoms may be absent or but very slightly marked, even though many years may have passed since the patient first complained of illness. More or less long-continued intervals of apparent recovery are common. Loss of power in one or other of the lower extremities almost always figures in the history, and sometimes this is for long the only symptom. After an interval of exemption a recurrence of this has taken place immediately after a severe moral shock, and it is doubtless to this circumstance, coupled with the tendency in these cases to emotional manifestations, that the frequency of error in diagnosis is due.

Post-mortem examination, in cases of insular sclerosis, reveals islets or nodules of a warm grey gelatinous-looking tissue usurping the place of the normal nerve substance, their size varying from that of a minute patch to islets of an inch or more in width. The number of these is as various as their size. They may be very few, or they may be scattered profusely throughout the cerebro-spinal nervous system, following, apparently, no kind of order or arrangement, except that they are much more often spread bilaterally (though with great irregularity) than confined to one lateral half.

There is a certain amount of diversity of opinion among observers as to the pathologico-anatomical nature of the islets, whether they depend upon an interstitial inflammatory process or represent a primary parenchymatous disease. They essentially consist of overgrowth of glial tissue which has encroached upon and wasted the white substance of the nerve-fibres. Very generally in the thick mass of fibrillary tissue numerous remains of nerve-fibres are still to be found, and especially in the form of naked axis-cylinders. Most frequently, I think, the preponderance of the fibrous tissue in the neighbourhood of thickened blood-vessels appears to point to a primary vascular origin. On the other hand, cases have been recorded in which the nerve-fibres were found wasted without notable changes in the blood-vessels, and with an amount of thickened neuroglia which was small in proportion to the extent of parenchymatous change.

The clinical history appears to me to offer strong support to the view that the pathological process is essentially of the nature of an interstitial inflammation. A remarkable feature in the disease is the frequent occurrence of remissions. A limb may be partially paralysed and recover in a few weeks.

Did the lesion consist in a primary parenchymatous degeneration this rapid recovery would not be possible. The circumstance appears to point to the probability of

the lesion consisting in the first instance of a local patch of inflammation of glial tissue, which temporarily interferes with the transmission of nervous impulses through the nerve-fibres. Resolution, it may be supposed, brings about recovery of power, and it is not until a mass of connective tissue is formed, as a result, perhaps, of repetitions of the inflammatory attack, that a permanent obstacle to the transmission of nervous impulses exists. If this be the case it is fair to assume that a similar lesion may occur in the optic nerve, and the temporary attacks of amblyopia which are so frequently met with may perhaps be explained in this way.

There is greater difficulty, to my mind, in accounting for the pallor of disc which is so notable a symptom. It is, as first pointed out by Charcot, a recognised fact that in cases of insular sclerosis secondary degeneration does not take place along the line of nerve-fibres involved in the lesion. Indeed, at a short distance from the islet of sclerosis the nerve tissue is in a normal state. The lesion appears to be of a strictly localised character. It does not appear likely, therefore, that the disc pallor can depend upon degeneration of nerve-fibres. Is it due to changes in the nutrition of the disc directly, consequent on interference with the blood-supply occasioned by the pressure produced by the connective-tissue lesion above?

It appears well to premise these few remarks upon the pathological changes in nerve substance in this disease in view of the observed changes found after death in the optic nerve, which may be assumed to be of the same essential character, and subject, therefore, to the same doubt as to the order of sequence of the destructive process.

I show to-night microscopical sections of the optic nerves and also of the spinal cord in illustration of the subject.

The preparations are taken from a male patient who died at the age of twenty-six, after an illness extending

over nine years, characterised by all the symptoms of typical insular sclerosis. There was considerable impairment of vision eight years ago, when it is noted that he is unable to read good-sized print with the left eye, but can do so with the right. At this time there was commencing optic atrophy in both eyes, but details are wanting in my notes. In this case, from a very early stage the nystagmus was so remarkably developed that examination of the fundus oculi was difficult. It may certainly be taken that some visual defect dates from at least eight years ago. Unfortunately for many years before his death the mental condition of the patient was such that it was impossible to obtain information as to the amount of sight which remained.

Dr. Risien Russell has been kind enough to prepare and stain the sections which are exhibited, and the following is condensed from his description of the pathological changes. (The report will be found at page 178.)

Optic nerves and tracts.—Both optic nerves presented a warm grey gelatinous appearance, similar to that met with in various parts of the central nervous system. The optic tracts showed the same change, though the alteration in colour was less marked in them. On microscopical examination both nerves were seen to be completely destroyed, staining methods calculated to bring into evidence axis-cylinders and myelin sheaths failing to do so, while the interstitial tissue was much increased and the nuclei multiplied. From a comparison of the macroscopic and microscopic appearances met with in the spinal cord and optic nerves, it appears probable that the morbid changes in the latter are identical with those in the former, and that an interstitial process is primarily responsible for the conditions observed in both, though in dealing with such advanced changes as those present in the optic nerves too definite an assertion on this point seems scarcely warranted.

Before proceeding to the important question of the diagnosis of insular sclerosis, I may be permitted to record a few remarks on my general experience of the ophthalmoscopic appearances noted, and the affection of vision ascertained in the cases of insular sclerosis which have come under my observation.

The most notable and by far the most frequent ophthalmoscopic change in the fundus is pallor of the disc. This usually involves its temporal half, and may vary from something so slight as to be difficult of recognition to a very pronounced atrophy, when the nasal half of the disc also usually shares in the changes. The whole disc is then of a grey-white colour. It rarely in my experience assumes the look of that which is so often met with in tabes, when the disc is of a cold bluish-grey tone with a metallic sheen upon it. The edges of the disc are often sharply cut, the physiological pit may appear deepened, and the lamina cribrosa well seen.

In at least 70 per cent. of the observed examples the changes in the disc were bilateral, although commonly more pronounced in one eye.

In cases which have been long under observation I think that I have assured myself that the colour of the affected disc has varied from time to time, the pallor apparently becoming sometimes considerably lessened. It is evident, however, that one cannot speak with certainty on this point.

Only exceptionally, but still very notably, a disc has been found of a dark red-grey colour, resembling, as I have long ago described it, "the tint of hyperæmic grey substance of the cortex cerebri," only slightly swollen, and its edges fairly distinct,—a condition strongly contrasting with that which obtains in "choked disc." In such cases it appears probable that an islet of neuritis affects the intra-ocular division of the nerve, whilst much more commonly one or more islets of lesion may be supposed to be situated in some portion of the optic nerve or tract, more or less distant from and behind the globe.

It is noteworthy that in some instances I have found normal acuity of vision accompanying a distinctly hyperæmic disc of the kind described.

In the cases in which there is more or less atrophy the vessels of the disc may be, but are not necessarily, reduced in size.

Associated with the atrophic disc there has been an almost endless variety in the degree in which vision has been affected. In not a few instances along with distinct atrophy there has been no defect whatever of central acuity. More often there is a diminution, corrected vision varying from $\frac{6}{9}$ to $\frac{6}{60}$. Speaking generally, it appears to me that the amount of impairment of vision in insular sclerosis is strangely little in proportion to the degree of atrophy noted.

I saw last week a lady affected with insular sclerosis whom I had examined on one occasion fourteen years previously. At that time her sight had been failing for three years, and there was evidence of commencing atrophy. In view of this former observation I inquired about her sight, and her family said that it was "all right; she was in the habit of reading the newspaper every morning." I found the right disc in a most advanced stage of atrophy,—such a disc as, if the case had been one of tabes, would, I feel sure, have been probably associated with almost absolute blindness. Yet with this eye I was astonished to find that she could read No. 6 J. at 12 inches with her spectacles. There was central colour scotoma. Vision with the left eye was much more affected. In this case, as in not a few others, failure of vision was an early symptom of insular sclerosis. At the time when I first saw her I could not detect any other symptoms, but I heard later that some years previously to her coming to me she had been clumsy with her right hand, dropping things from it. This symptom was described to me as "hysterical."

Mrs. C—, whom I saw in 1885, showed both discs atrophic, and told me that about eight years previously "one

eye rather suddenly failed." It was not till four years later that difficulty in walking occurred.

Mrs. E. N—, æt. 39, was found by Mr. Lawson to have commencing atrophy of discs in May, 1884, and her general health began to fail a year later. In 1888 Mr. Lawson reported "the field of the right eye much contracted peripherally, but central vision entire, though dull." Like the others, this lady is a characteristic example of insular sclerosis. She told me in 1894 that three years previously she could not see to read and write, but later recovered the power for two years, during which time she could read small print fairly.

The marked difference in the degree to which vision is impaired respectively in tabes and insular sclerosis did not escape the notice of Charcot, who thought that the comparative immunity enjoyed by insular sclerosis depended upon the fact that the axis-cylinders are usually preserved in that disease. The existence of central scotomata (usually of relative character) in the visual field has on many occasions come under my observation (Fig. 13), but I am unable from personal experience to say anything about their relative frequency, as examinations on this point have not been regularly conducted; that they are frequently absent I am sure. Uhthoff found central scotoma in fifteen out of twenty-four cases of insular sclerosis in which the visual fields were accurately measured. He found peripheral contraction of the visual field in eleven out of twenty-four cases. I am unable to give statistics, but from my observation I should have expected the proportion of this change to have been larger. Peripheral contraction of the visual field is so common and marked a feature of insular sclerosis as to raise a difficult question. The lesion may presumably occur at any part of the optic nerve or tract. One can explain, therefore, the absence of central scotoma in many cases by the probable escape of the fibres distributed to the macular region. But as regards peripheral contrac-

FIG. 13.

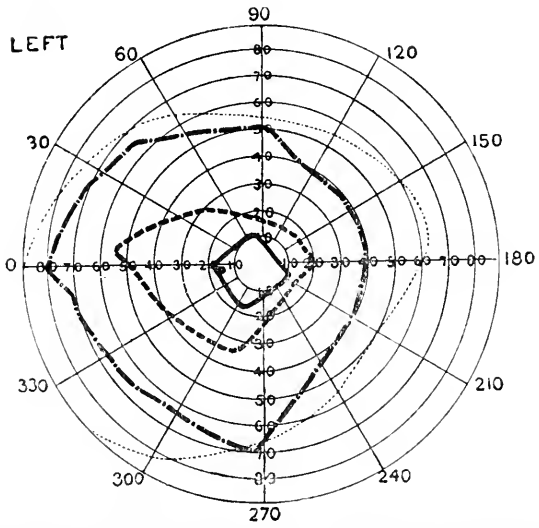

Case of insular sclerosis with colour scotoma. Green seen as white centrally; as "dull yellow" up to dotted line; "something light" beyond that.

tion its frequency in the circumstances appears to me inexplicable with our present knowledge.

The amblyopia of insular sclerosis is very often transitory. One frequently meets with cases in the history of which there is a description of more or less loss of sight in one eye, which came on either suddenly or gradually, continued for some weeks or months, and then cleared off, to be succeeded later by a similar condition occurring in the other eye, or a recurrence of the difficulty in the same eye. I should say that the impairment of vision in these cases is usually not very severe, and I do not think I have heard actual temporary blindness described.

Here is a case which illustrates this transitory amblyopia.

Maude P—, æt. 38, loss of power in all four extremities, incontinence of urine and fæces, ankle-clonus, spastic rigidity. Patient eight years ago almost entirely lost the sight of the right eye for a week or two, when it began to gradually improve, but has never become quite good. Two or three years previously the sight of the left eye

had become dimmed for a short time. When seen, V.=R. $\frac{1}{60}$, J. 16; L. $\frac{3}{60}$, J. 1. Right optic disc markedly atrophic. Size of vessels not much changed. In the case of another lady my note was "amblyopia of right eye. Both discs pale. A few weeks ago sudden and considerable loss of vision in both eyes; the left has much improved."

Should there be no ophthalmoscopic change the liability of this symptom to be construed into one of hysteria is manifest. And the same must be said of the peripheral contraction of the visual field in insular sclerosis, which may, so far as my observation goes, be indistinguishable from that characteristic of hysterical amblyopia. But usually in the cases of insular sclerosis there is some, though it may be but a small amount of pallor of disc, *not equally marked in the two eyes*, and this, I think, is sufficient to differentiate the case.

On this point I would draw attention to the three charts of visual fields (Figs. 14, 15, 16, respectively).

FIG. 14.

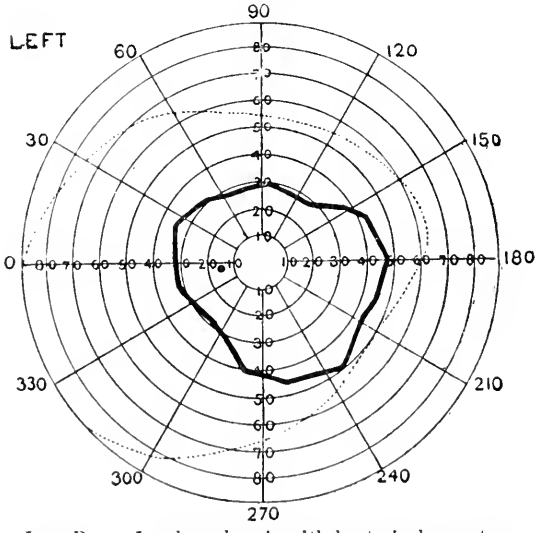

Jane P—. Insular sclerosis with hysterical symptoms.

Fig. 14 is the left visual field of a woman, Jane P—, æt. 28, who was sent to the National Hospital as a case of hysteria. In May, 1893, after severe mental trouble she had suffered from weakness of the left arm and leg. In the course of a month the leg recovered. Since then, with interruptions of improvement, there has been a gradual loss of power involving both legs and one or both arms, with double ankle-clonus, "intention tremor," and nystagmus, incontinence of urine and fæces,—in fine, distinct evidence of insular sclerosis. Two years ago it appears that the sight of the right eye was dim for a time, but now she says that she can see perfectly, and in effect V.$=\frac{6}{6}$ and J. 1 with each eye. Notwithstanding this we find the optic discs pale, especially the right one. Careful perimetrical examination made by Dr. Harris, Senior Resident Medical Officer, elicits the very marked peripheral contraction of visual field shown on the chart. There are no colour scotomata.

Fig. 15 was taken also by Dr. Harris from a patient of Dr. Hughlings Jackson, Elizabeth L—, æt. 42 years, a typical example of insular sclerosis, who has been continuously ill for ten years. There have been no hysterical symptoms. The optic discs are pale. Corrected vision with R. eye is $\frac{6}{60}$, J. 12; that with the left $\frac{6}{36}$, J. 7. The similarity in the amount of concentric contraction of visual field to that of Jane P— is very marked. In her case, again, there are no colour scotomata.

Fig. 16 was taken in 1890 from a girl, Ethel B—, æt. 16, suffering from hysterical paraplegia, having been unable to move her legs at all for sixteen months. (It was not a case of insular sclerosis.) Under systematic treatment she recovered in eight months. I had a letter from her mother the other day, in which she says, "E. plays tennis, dances, and skates, rides a bicycle with great enjoyment, works hard in the parish; . . she is thoroughly healthy and active. No one seeing her would have the least idea that she had gone through a serious illness." The evidence of this case having been one of hysteria which happened

FIG. 15.

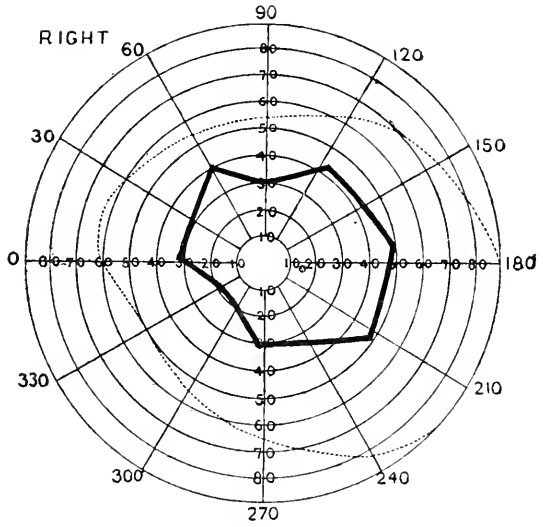

Elizabeth L—. Insular sclerosis without hysterical symptoms.

FIG. 16

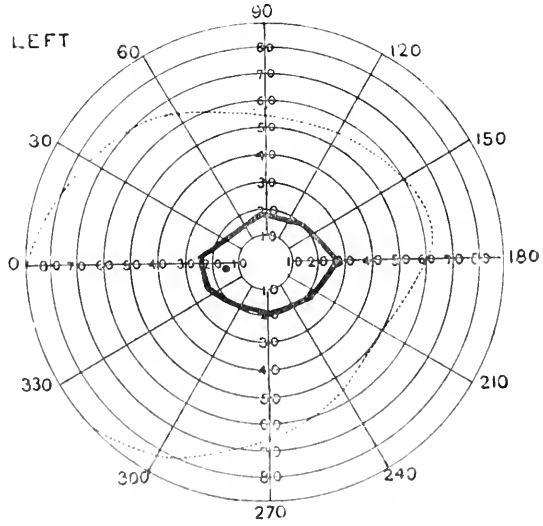

Ethel B—. Hysterical paraplegia.

nearly seven years ago is thus complete. The peripheral contraction of visual field, though somewhat more pronounced, is fairly comparable with that pictured in Figs. 14 and 15, which are examples of insular sclerosis. How much this resemblance of the visual fields adds to the acknowledged great difficulty of diagnosis between insular sclerosis and hysteria may well be conceived.

The occurrence of more or less paresis in one or more limbs in a person under middle age, with exaggerated knee-jerks, and sensations of "numbness" or "tingling" and vertigo should be viewed with suspicion as pointing in the direction of insular sclerosis. Should nystagmoid movements be added, with diplopia, either present or past, and ankle-clonus or "intention tremor," I should consider the evidence to point strongly to the existence of the disease. But "intention tremor" and ankle-clonus and nystagmus may all be absent. Is it possible in such circumstances to feel security in our diagnosis? I think it is. The tendency in insular sclerosis for an attack of more or less powerlessness in a limb, to be recovered from, and again followed by attacks of a similar kind in the same or other limbs, constitutes a diagnostic feature of great importance.

The fact, ascertained by comparatively recent observation, that disorder in the district of the optic nerve is met with in about 50 per cent. of cases of this disease, gives us perhaps a still more important help in diagnosis.

No doubt this symptom has to be examined for with care, but its presence will compensate for the absence of many other of the classical signs. For some time past I have been disposed to think that the occurrence of paresis in one or more limbs with spontaneous recovery, and recurrence of the symptom in the same or another part (the reflexes being exaggerated), together with amblyopia, accompanied or not by pallor of one or both discs, constitute a symptom group which ought to hold a place in the diagnosis of insular sclerosis not second to that hitherto occupied by "intention tremor," nystagmus, or diplopia.

Bearing, I think, on the subject under discussion, though quite unconnected with the remarks which I have just offered, I would call your attention to a case of "Concentric contraction of visual fields in a patient suffering from multiple neuritis, which was probably of diphtheritic origin."

A medical man æt. 58, much exposed to infectious disorder, applied to me in April, 1896, on account of increasing loss of power in his limbs, especially in the lower extremities, with reduction of faradic excitability in some muscles. Five weeks before his symptoms commenced he had a not severe sore throat. Not to go into details, I will only say that in the course of his illness his arms became affected, and fluids regurgitated through the nostrils. In June he described that, in walking, he found the pavement appear concave at the spot upon which he looked, and was, in consequence, constantly fearing that he would catch his foot in the depressed space, which appeared to him as about the size of a saucer. Thinking that this might possibly be explained by the existence of a central scotoma, I sent him to Mr. Carter, who was kind enough, at my request, to provide me with charts of his visual fields, shown in Figs. 17 and 18. Mr. Carter reported his fields as small, and added that there was no scotoma, a colour-spot of one square millimetre being seen. There was slightly subnormal vision with the left eye, but not in a greater degree than is often found as a congenital difference between the two eyes. He thought that the left disc looked somewhat troubled and pallid. Other charts taken a few days ago show that the fields have enlarged, although they are still considerably below the normal in extent, and the right is irregular in outline. Is this condition dependent on retro-ocular neuritis? The only instance which I can find in the Society's 'Transactions' of concentric contraction of visual fields as the sequel of diphtheria was published by Mr. Jessop in vol. vi. In that case there was also cycloplegia.

FIG. 17.

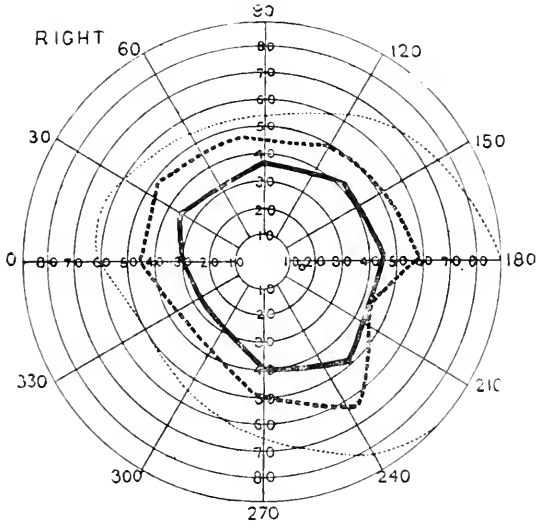

FIG. 18.

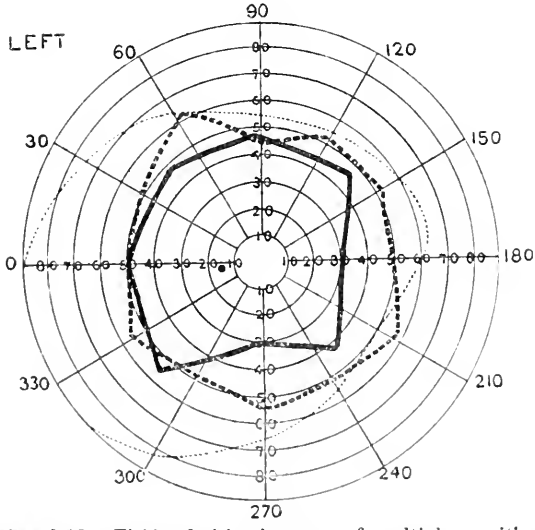

FIGS. 17 and 18.—Fields of vision in a case of multiple neuritis (probably diphtheritic). Continuous line = fields on June 15th, 1896. Dotted line = fields on February 20th, 1897.

Sir W. R. Gowers said he regretted he had but little to say upon the subject before the Society, because almost everything he could say was already in print.

It was of great importance for ophthalmologists to recognise a fact of recent knowledge, namely, that the axis-cylinder is not a single conducting body, but contains many fibrils, each a separate conducting tract. The fact that there was a far greater number of conducting tracts in every nerve than they had thought was of immense importance with regard to the action of every sensory organ, and to the symptoms of such pathological changes of the optic nerve as were being discussed.

Mr. Gunn referred to orbital cellulitis and the involvement of the optic nerve. He had seen one acute case of special feature. A young man of gouty heredity, after a bath, had symptoms in which were included paralysis of the left ocular nerves, or some of them, transient proptosis, tenderness on pressing back the eye, and then one or two convulsions, beginning on the right side, and indicating irritation of the hemisphere on the side of the orbital affection. This on the left side was followed by slighter symptoms of similar character on the right, which had passed away when he saw the patient. From the cause he thought it a case of acute rheumatic cellulitis of the orbit, spreading to the adjacent cerebral membranes, and affecting the tissues of the other orbit in slight degree. The course of the case harmonised with that view; the patient had had one or two slighter recurrences of it since, as such affections are prone to recur, but was now quite well. He thought acute rheumatic cellulitis, causing prominence of the eyeball, and involving the membranes on that side, and affecting the optic nerve, was an affection that had scarcely been recognised. The common rheumatic cases due to cold chiefly affect the nerve-sheaths, so that there is paralysis of the nerves without evidence of general orbital cellulitis.

Of the cases of insular sclerosis he had seen in which there were definite symptoms connected with the optic

nerve and vision, perhaps ten or twelve in number during recent years, he had not met with symptoms to suggest that the optic nerve was the seat of an islet of sclerosis, although it was well known that this might occur. Nor had he seen indications of retro-ocular neuritis. In all the cases the symptoms had been identical with those met with in locomotor ataxy; so much so that he had felt obliged to conclude that in all the cases there must have been a primary affection of the nerve-fibres, identical with that in locomotor ataxy. It seemed a point of general pathological relationship between the neuroglial tissue and its tendencies as seen in insular sclerosis, and the nerve elements themselves with their tendencies as seen in tabes. Both come originally from the same embryonal elements. That relationship had seemed to him emphasised by this identity of the changes in the eye in tabes, in which they were compelled to regard the atrophy as beginning in the nerve elements themselves. Moreover in connection with that, and in connection with the optic nerve generally, they had to remember the extraordinary amount of interstitial tissue which was developed in the optic nerves in tabetic atrophy. He thought the description that Dr. Buzzard had given of the changes in vision in many of the cases he had seen, in which there were visible changes in the optic nerve, and also that which he had said of the optic nerve in insular sclerosis in several of the cases in which it presented morbid appearances, and especially and notably the description he had given of the case of disease of the optic nerve, of which sections were on the table, were not distinguishable from tabetic atrophy.

Regarding retro-ocular neuritis, he would like to say that one reason why physicians were less qualified to speak of retro-ocular neuritis than ophthalmic surgeons was that, as Mr. Gunn said, retro-ocular neuritis was so frequently a result of chronic blood poisons—an isolated result, and therefore brought only to the notice of ophthalmic surgeons. The affection first abolished any scepticism he had with

regard to the wide-spread influence of gout, as emphasised long ago by Mr. Jonathan Hutchinson. Most young men began by being sceptical about their seniors, and especially about different theories, and he had a good deal of doubt about that which Mr. Hutchinson taught regarding the influence of gout in producing inflammation in the trunk of the optic nerve. But some cases that he (Sir W. R. Gowers) saw absolutely destroyed any room for doubt. His own experience, and he thought that of most, was that as the years go on the pathogenic influence of the gouty state, and of all the various toxic influences which it involved, became much more definitely evident.

The only other point to which he wished to allude was one which was not often brought under the notice of ophthalmic surgeons, because the cases were very rare, and it was of great importance, and one which the President would doubtless remember. It was the fact that retro-ocular neuritis, where the nerves cross at the chiasma, might simulate intra-cranial tumour. The evidence on which he based that statement was that he had seen several cases in which the only symptoms were headache and temporal hemianopia, in which the diagnosis of tumour had been made, in which there was a gouty history, and in which the fact that it seemed possible that symptoms might be produced by an interstitial inflammation at the middle of the chiasma led to treatment on that plan; and in each of those cases the result was that the symptoms became stationary. Those which he had been able to follow had remained absolutely stationary since. One died, but from Bright's disease and uræmic convulsions. He thought the President would remember another case of the kind from America, which both saw. In each of those cases the probability of a tumour pressing on the arm centre seemed great. But the practical point was that if there were no other symptoms than headache the possibility of inflammation should induce the medical attendant to give the patient the chance afforded him of treatment suitable for inflammation, which (he need hardly

say to ophthalmic surgeons who had helped so much to maintain the old treatment) consisted in the administration of mercury. In the cases referred to such a course had been followed by the hypodermic injection of strychnia.

Dr. BERRY said he came more with the intention of listening than of speaking. When he was asked to take part in the discussion on retro-ocular neuritis he first realised how little he knew of the subject. When he received the paper in which were stated the points on which information was desired, and still more when he heard the interesting and able paper of Mr. Gunn, he became more puzzled than ever. Owing to the number of causes for retro-ocular neuritis which Mr. Gunn introduced, and the multitude of facts referred to, it was impossible to properly assimilate such a paper without having an opportunity of reading it carefully.

With regard to the question of the diagnosis of retro-ocular neuritis generally, he thought it not unlikely that others like himself were perhaps too much inclined to diagnose that affection. He did not know of any affection in which the symptoms were more varied. Moreover, they were not of the same precision and definiteness as the symptoms of, for instance, detachment of the retina or retinitis pigmentosa, in which, without ophthalmoscopic examination, one could feel sure in most cases what the lesion was. He would say that in all cases where one saw changes in the optic disc or discs, which were so decided that any two competent observers would not be in the least doubt as to their nature, the case was a neuritis; but why it should be called retro-ocular neuritis he did not quite see. There were a certain number of cases of neuritis which were distinguishable in their symptoms and appearance from what one looked upon as encephalopathic papillitis. The symptoms of retro-ocular neuritis referred to by Mr. Gunn were pain on movement, early blindness (principally in the centre), and recovery. He (Dr. Berry) asked whether such symptoms did not

exist in many other conditions besides retro-ocular neuritis. The symptoms with reference to the pupils were new to him, but this was probably his own fault.

Another group of cases which were diagnosed as retro-ocular neuritis were those in which similar more or less indefinite symptoms with amblyopia were followed, after a certain time, by pallor of the disc or optic atrophy. But there, again, he was very doubtful if the observer was always justified in diagnosing retro-ocular neuritis. Still less was the diagnosis justified where, as often happened with such symptoms, there were not at any time any ophthalmoscopic changes in the disc. Such cases were those in which retro-ocular neuritis and hysteria might be confused.

Then as to the causes of uniocular neuritis, especially in relation to the teeth, he had seen a considerable number of cases in which he suspected the teeth had something to do with the ocular condition, and had therefore had the teeth properly seen to, following which he had sometimes flattered himself there had been improvement in the actual condition. But he did not feel any surer of that than he did of the action of drugs in any particular disease. Possibly the conclusion to be drawn in such cases depended on the observer's temperament; he was inclined to be sceptical about the matter. The question of diagnosis was not a mere matter of sentiment, for certain conceptions might lead one to withdraw one's attention from other slight changes, in the retina for instance. There were cases of migraine where the patient had suffered for years from migraine and ocular symptoms, and always recovered until all at once he got a scotoma, either paracentral or peripheral. On examination the fundus revealed nothing, yet he believed that those cases were mostly retinal. He had observed two such cases in which there existed shortly after the attack an œdema surrounding a constricted retinal vessel. The scotoma in these cases, too, occupied

the exact site of the œdema, not the area of distribution of the vessel.

He thought poisons were most unlikely to produce uniocular neuritis, and therefore he had not directed his attention to such a causation in uniocular cases. He believed there was a tendency to make too many groups, which complicated matters. He ventured to suggest a classification, which seemed to him more in accordance with our present knowledge, into three groups: (*a*) neuritis associated with serious cerebral disease other than such as produced papillitis, *e.g.* those existing along with chronic alcoholism, syphilis, &c.; (*b*) uniocular neuritis, which was probably almost invariably the result of chill, whatever other condition co-existed; and (*c*) binocular neuritis as found in toxic amblyopia, if indeed such cases should be considered cases of neuritis at all. He held that this had not been proved, and that the cause of the general belief to the contrary was the result of post-mortem examination in cases really belonging to the first group.

Hysterical amblyopia seemed to him to be a subject as wide as retro-ocular neuritis itself. No doubt many cases diagnosed as hysterical amblyopia were cases in which the ocular symptoms were forerunners of some more serious cerebral or nerve disease which took place later on. As to cases where recovery of vision was incomplete, and central absolute scotoma remained, there were cases of hereditary neuritis in young people under thirty-five in which an absolute scotoma was left in both eyes. He had rarely found recovery so complete in any case of retro-ocular neuritis that a central colour scotoma could not be found.

Regarding instances of disease without occurrence of other nervous affection, that was a matter also in which most of those present had had experience,—such, for instance, as in children where there has been optic neuritis and no cerebral disease and in which complete recovery has ensued, but after a few years some distinct cerebral (tubercular ?) trouble often supervened.

Dr. A. Hill Griffith.—My conception of a typical case of retro-ocular neuritis is great impairment or even total loss of sight, coming on rapidly in one or both eyes, with pain in the orbit, increased by voluntary movements of the eye and on pressure of the globe backwards, and the presence of an absolute central scotoma in the field of vision, the disc showing at first slight if any change, but later on invariably becoming atrophic.

I have searched my notes for the last dozen years, and have found twenty-seven undoubted cases. In making this selection I have put aside cases which might be caused by tobacco or other toxic agents, such as bilateral cases in heavy smokers, even where the scotoma was in part absolute, as I have for long convinced myself that this degree of scotoma may occur in typical tobacco cases ("'The Field of Vision,'" 'Medical Chronicle,' November, 1885). Cases which have only come under observation long after they have run their course, and which consequently one could only suspect to have been retro-ocular neuritis, have also been discarded; as also central scotoma associated with retinitis or other change in the choroid or retina, however slight.

Only eight of the twenty-seven cases were bilateral, the onset being practically synchronous except in one case, in which the second eye did not become affected till nearly two years after the first.

There were twelve females and fifteen males. The four youngest were aged 14, 18, 18, and 18 years, ten were between 20 and 30, six between 30 and 40, and seven between 40 and 57.

The vision was from 16 to 20 J. in 8, fingers in 13, p. l. in 3, and no p. l. in 3.

A central scotoma was noted as present in nearly all, and when capable of perimetric measurement was about 10° to 20° in diameter. In no case was the field contracted to any extent. In some cases a strong gas flame could not be seen in the area of the scotoma, while in the periphery fingers could easily be counted.

When one stood in front of the patient with his sound eye closed, it was usually found that, on retreating to about 6 or 10 feet, one's head completely disappeared from the patient's view, while one's hands could be easily seen if moved around.

The direct reflex action of the pupil was retained in all except where there was no p. l., and in these cases when the vision came back the pupil was found to have regained its mobility.

Pain is not present in all cases, is noticeable only at an early stage of the affection, and very quickly disappears.

The vision fails very rapidly, and the patients generally tell us that by the second day it had got to its worst. They often describe the defect of sight as coming quite rapidly, like a mist before the eye, and can often recall the very hour of the day in which it occurred.

If seen early, within a few days, the disc may be absolutely normal, or show slight signs of neuritis; in a few cases intense redness was noted, but in the majority the disc was pale, and often very markedly so, with some diminution in calibre of the vessels. Later on all the cases without any exception assume the appearance of atrophy, and even if the vision becomes normal the pallor is permanent.

I have treated nearly all my cases with 10-grain doses of iodide of potassium thrice a day, and blisters to the temple; in a few I have given salicylate of soda. Improvement has taken place in nearly all that I have seen, and as a rule the more rapid the onset the more favorable is the prognosis. The improvement in many of the cases is very remarkable, and I have seen No. 1 J. and $\frac{6}{6}$ from cases of fingers, bare p. l., and even no p. l.

With recovery of vision the scotoma may entirely disappear, or a very small slightly eccentric scotoma may be made out on careful examination, even when the vision has completely returned.

I have a note of such a condition in a young woman of

twenty-five, whose vision in the affected eye rose from 20 J. to 1 J. and $\frac{6}{6}$, and when seen ten years after the onset of the affection, a small scotoma about 2° in diameter could be made out just above the fixation point; she called my attention to it by her remark that when looking at her mother's nose she could not see her eye.

I am not aware of any case in which total and permanent blindness has occurred; many cases of course make a partial recovery, and remain in this condition. I have never seen a second attack in the same eye.

In a fair proportion of cases rheumatism is certainly present, but the patients are often in fair health, and sometimes quite robust.

In one case only did I have reason to diagnose congenital syphilis from a typical salmon-coloured patch appearing in the cornea during treatment. I have seen nothing that suggests to my mind any connection whatever between retro-ocular neuritis and disease of the teeth, sphenoidal sinuses, migraine, hysteria, or general disease of the nervous system. In a number of cases rheumatism is certainly the cause, and I know of no other for certain, although, as already mentioned, congenital syphilis was probably present in one case, and in two others the patients had sustained severe blows on the head some time before the onset of the disease.

My friend Mr. William Thorburn, to whom I was speaking of this class of case, suggested that a rheumatic inflammation of the sclerotic around the optic nerve would account for the symptoms. The site of the lesion, whatever its exact nature, must, I think, be very close to the disc, as the pallor shows within a few days; in contrast to what takes place in cases of injury to the nerve at the apex of the orbit, where the disc keeps its colour for at least a fortnight or three weeks. Pressure on the globe produces pulsation of the vessels on the disc, showing that there is no interference with the retinal circulation.

In the most marked cases, when seen early, the defect

was not limited to the centre of the field, but affected its entire area; and it was only later on, when the vision was returning, that the characteristic central defect showed itself,—a fact which speaks more strongly for such a lesion as Thorburn suggests than for an axial neuritis. The axial fibres, being the most highly specialised, are the first to become affected and the last to recover.

I have notes of other cases, some with central scotoma, which I should not care to call retro-ocular neuritis, but as they bear on the subject I may mention them briefly.

A young lady on rising suddenly struck her head very forcibly against a very heavy fixed beam of wood; she did not lose consciousness, but in a couple of days became aware of a black spot in front of the right eye. I saw her five months later, and found an absolute scotoma just above the fixing point; it measured about 20° in diameter: the periphery of the field was normal. She could read fine print, and had distant vision of $\frac{6}{6}$, but she had to throw her head back a little to see the letters properly. The disc was rather pale. The other eye was normal on ophthalmoscopic examination, but had never been a reading eye on account of congenital amblyopia. On examining seven years later I found everything as before unchanged, but I also saw what was either not there on the previous examination or had been passed over,—excessively fine, erosive-like dots in the region of the lower half of the macula. In this case I am very doubtful whether the scotoma was an expression of injury or neuritis of some of the fibres of the optic nerve, or whether it was not rather due to obliteration of the lower macular artery. That it was the direct and immediate result of the blow there can be no doubt.

In my paper on the field of vision, already referred to, the chart No. 38 shows a very similar scotoma in a young woman with mitral disease. The defect came on suddenly, and the vision was nearly $\frac{6}{6}$. We know that the macula is supplied by two fine arteries, one supplying the upper half, the other the lower half, and blocking or rupture of

the lower of these might well account for the scotoma in these two cases.

I have seen four cases of proptosis with failure of sight.

E. N—, a woman of 41, the subject of several attacks of acute rheumatism, developed proptosis of the right eye; the vision, at first normal, gradually failed with pallor of the disc. The periphery of the field was quite normal, but the fields for red and green were greatly contracted; there was no central scotoma. Nine years later the disc was quite white, and she could only see one's hand; the proptosis remained.

J. C—, a man of 38, had three attacks of rheumatic fever, proptosis of the right eye came on gradually, but the vision kept normal for some time till it quite suddenly failed, and there was no perception of light in the eye. The sight did not return, but the disc remained of good colour for several months, and paralysis of the movements of the globe came on.

R. W—, a man æt. 28, had a severe attack of syphilis, and four years later got proptosis of the left eye, the vision gradually falling to 20 J., with a central dulness and normal periphery of the field. Treatment restored the sight, and the eye went back into position.

J. N—, a married woman of 31, lost the sight of the right eye totally, with severe frontal neuralgia, ptosis, and paralytic external squint; the disc was absolutely normal. After six weeks' treatment the vision rose from no perception of light to 1 J. and $\frac{6}{6}$, with a perfect field.

Mr. Richardson Cross said he felt great hesitation in attempting to speak on the subject before them, particularly on the ground which Mr. Gunn's able paper had traversed. The literature of the subject had prejudiced them, till lately, to look upon retro-ocular neuritis as having, as the essential symptom, a central scotoma, and, as the most important ophthalmological sign, slight pallor of the optic disc. He would like to make a few observa-

tions on the question as so limited. In reading about the subject he was struck by the large number of cases for which no distinct cause could be assigned. For instance, in the paper of Samelsohn, based on 154 cases of all diseases of the optic nerve, the writer considered that fifty-seven should come under the category of retro-ocular neuritis, twenty of which were non-toxic, while the other thirty-seven were due to toxic causes. On that basis retro-ocular neuritis seemed to be a very common disease, while the proportion of non-toxic cases was extremely large. Again, Uhthoff, out of 400 cases of alcoholism, found that in seventy of them there was pallor of the temporal side of the disc, showing how extremely common was pallor of the disc in alcoholism. Assuming that all the cases were not solely due to alcohol, he made a subdivision, and found that half of them were due to alcohol, one sixth to tobacco, and two sixths due to tobacco or alcohol. Therefore Uhthoff, who was an authority on the subject, considered alcohol the most important factor in the disease, an opinion that would not find much support in this country.

In the published cases of retro-bulbar neuritis a number of various causes have been assigned. So far as he could gather from the able and interesting paper of Dr. Buzzard, that experienced neurologist seemed to have found only one factor in its causation, viz. insular sclerosis. His paper had certainly shown the extreme importance of that disease in these cases. With the object of ascertaining whether retro-ocular neuritis could be very common, he (Mr. Cross) wrote a letter to six of his most experienced medical colleagues, asking them whether, excluding albuminuria, cerebral mischief, and diabetes, or cases having abnormal ophthalmoscopic appearances, they had experience of sudden or temporary blindness occurring during acute diseases. The universal reply was that very seldom indeed (practically never) could they remember any in which there was loss of vision which could not be definitely accounted for. It

was evident that optic neuritis occurring in the orbit, from erysipelas, cellulitis, or periostitis of the optic canal, must be looked upon as retro-ocular. Assuming that the cases which had been described pathologically as optic nerve tissue degeneration, interstitial tissue development, mainly in the papillo-macular tract, together with central scotoma, without change in the optic disc except slight pallor, were typical cases of retro-ocular neuritis, he went through his private case-books and found five cases of monocular slight neuritis, not amounting to papillitis, with slight hyperæmic haze, or change on the temporal side of the optic nerve, associated with central scotoma, in which the peripheral field was not at all affected, and in which no toxic or other cause could be assigned, and where he could find no disease in the fundus other than the slight change in the optic nerve. Those cases were at the disposal of the Society.

With regard to the causation of central scotoma without impairment of the peripheral field, an examination of the charts taken by the speaker showed him that tobacco amblyopia was the most common cause; choroiditis with change in the macula and slight central retinal hæmorrhages were fairly numerous; one or two cases without fundus change followed a blow on the eye, and two had embolism of the macular artery. It occurred to him that retro-ocular neuritis outside tobacco or other definite cause was extremely rare. Was it intended that the cases hitherto so designated should be rearranged, and only those included which depended upon obvious disease either on the surface of the nerve or between the optic foramen and the bulb?

Notes of five cases are appended, in which a central scotoma in a good peripheral field and impaired vision of one eye probably depended on retro-bulbar neuritis.

Case 1. *Acute retro-bulbar neuritis in late secondary syphilis.*—A. B. A—, seen November 23rd, 1891, sent by Dr. Rudge. His right eye had always been useless with congenital cataract. "Four days ago he found the

sight uncertain (of L.) ; he could not read the newspaper in the evening. The day after he was worse, and yesterday he could not write at all nor read a letter."

V. { R. always faulty. J. 20.
{ L. formerly good, $\frac{5}{60}$, scarcely J. 18.

The periphery of the field of vision was perfect, but the centre showed a scotoma over an area of 20° each way

Fig. 19.

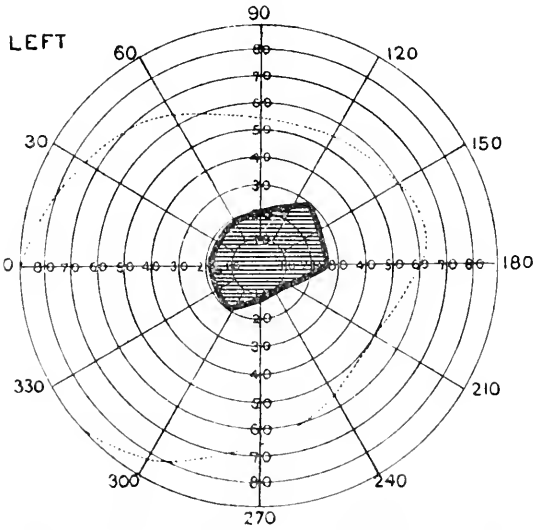

A. B. A—, November 3rd, 1891. Shaded area = scotoma.

from the fixation point, rather widest up and out (Fig. 19). There was no definite fundus lesion, very slight indefinite pallor over the macula. The diagnosis of axial neuritis was made. Mercury was prescribed in full doses, as there was a clear history of the patient having had syphilis in January, 1891, and he still had some ulceration of the fauces.

Within a week from commencing treatment patient's vision had improved to $\frac{5}{36}$ and J. 6. The scotoma had almost disappeared. White was seen all over, green was not quite bright, but could be seen in any part of the

field. A week after this no dulness for colour remained. Vision $\frac{5}{16}$, J. 1. The patient was under the influence of mercury, and was ordered iodide of potassium. I have no further note of his condition.

Case 2. *Monocular central scotoma; retro-ocular neuritis?*—Albert H—, æt. 42, a carpenter, came February 6th, 1890, complaining of his right eye, the sight of which had been defective six weeks. Sight much as now when first noticed.

V. $\begin{cases} \text{R. } \frac{20}{250}, \text{ J. 16.} \\ \text{L., J. 1, } \frac{20}{23}, \text{ with good field.} \end{cases}$

Field of right perfect at periphery.

Central scotoma for all colours and for white. Red-blind within an area of 15°. Macular region appears

Fig. 20.

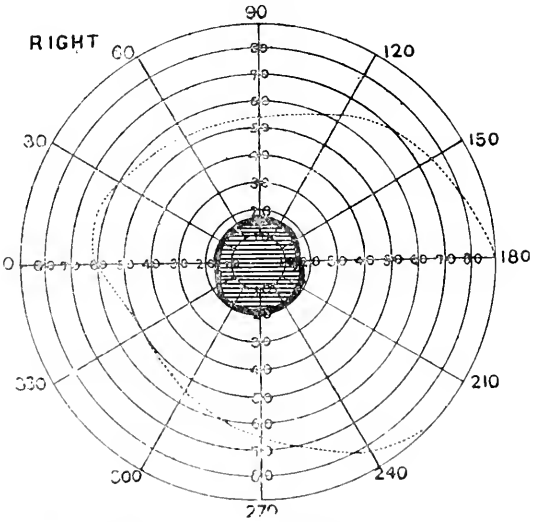

Albert H—, April 3rd, 1890. Shaded area = scotoma for red.

pale; the centre is reddish, but no pathological condition can be detected. The optic nerve is pallid, particularly on the temporal side; on it the retinal vessels are fuller than in the opposite eye. The diagnosis of partial optic

atrophy was made. Patient smoked scarcely at all; there was no history of illness to account for the condition of sight. On February 26th the scotoma was less positive. Vision $\frac{20}{60}$, J. 8. April 3rd, sight rather less clear, nerve definitely pallid. Scotoma for red (Fig. 20). The patient was lost sight of.

Case 3. *Central scotoma with unusual impairment for colours; probable central optic nerve degeneration following retro-ocular neuritis.*—Miss W—, sent by Dr. Skinner. For twenty-five years has suffered from sudden attacks of giddiness or vertigo; occasionally sees zigzags and pyramids of light. Twenty-five years ago almost entirely lost the sight of the right eye, which has since seemed covered by a thick cloud. The patient is anæmic.

Fig. 21.

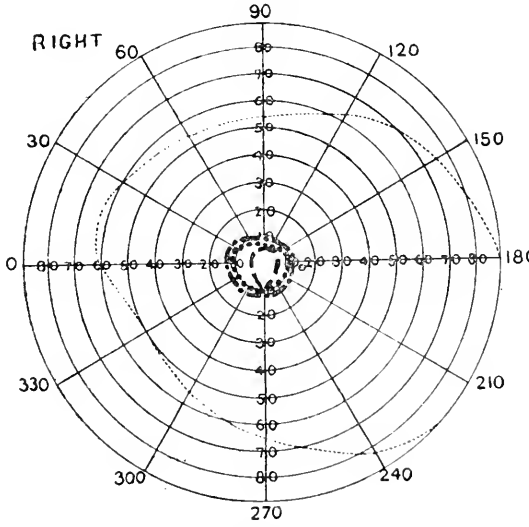

Miss W—. Scotoma for red — — —; scotoma for blue - - - - - -; scotoma for yellow . . . . . .

She comes to get spectacles for reading, and expects no help for the right eye, which has been defective so long.

V. { L. $\frac{6}{7}$, + 3, J. 1.
{ R. $\frac{6}{18}$, varying to $\frac{6}{9}$, + 3, J. 14 to J. 8.

The R. peripheral field perfect. Central scotoma for blue and yellow of about 10°; for red of 5°; green is seen centrally (Fig. 21). Careful examination of the fundus showed it to be normal except for a slight but distinct atrophy of the lower temporal quadrant of the optic nerve. The left nerve was normal.

Case 4. *Monocular scotoma with slight visual defect in a smoker.*—G. F—, æt. 72, came November 6th, 1896, sent by Dr. Field. A month previously noticed a small

Fig. 22.

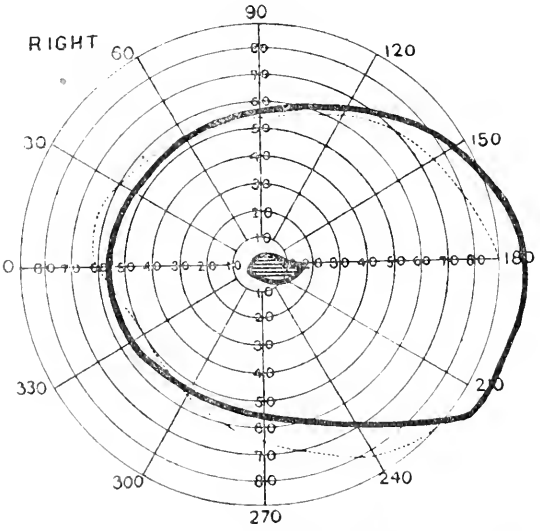

G. F—, November 6th, 1896. Shaded area = scotoma.

black shading in the clear space between the edge of a drawn-down window-blind and the window-frame. A positive scotoma was found to be present over the right eye, just touching and below the fixation spot, its longest diameter covering 8° (Fig. 22). The field of the left eye was quite perfect for the minutest specks of colour.

V. $\begin{cases} \text{L. } + 1{\cdot}25 = \frac{6}{6}. \\ \text{R. } + 1 = \frac{6}{9} \text{ eccentric.} \end{cases}$

No lesion could be discovered in the macula, and the case was probably one of damage to the axial fibres of the right optic nerve.

The patient was a heavy smoker. He was ordered to leave off or largely diminish his tobacco. A later visit showed no change in the symptoms, optic nerve slightly more pallid.

Case 5. *Partial atrophy of optic nerve ; progressive pallor with improving sight ; probably retro-ocular interstitial degeneration.*—Mrs. W—, æt. 51, sent by Dr. Dane, August, 1891. Two months before found on rising in the morning that the *left* eye was clouded in its lower half. Has been

Fig. 23.

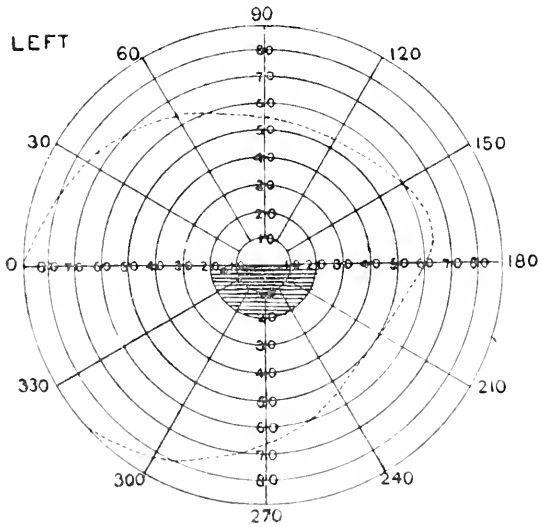

Mrs. W—, August 25th, 1891. Central dark area = absolute scotoma; shaded area = colour scotoma.

complaining of numbness and tingling of the face, particularly the infra-orbital and mental twigs of the *right* fifth nerve. No history of syphilis.

V. { R. $\frac{5}{6}$, J. 6.
{ L. $\frac{5}{36}$, J. 16.

Field of L. good periphery, and above horizontal line; below horizontal line a positive scotoma to the 10° limit, outside this an area blind to colour, and faulty for white (Fig. 23). Optic nerve pale, especially on temporal side; vessels attenuated, slight pulsation of artery, macula velvety but healthy. The right optic nerve is pale, but distinctly less so than the left.

November 27th.—Vision, L. $\frac{5}{9}$, J. 8.

November 22nd, 1892.—Vision, R. $\frac{6}{6}$, J. 1; L. $\frac{6}{8}$, J. 4.

The left nerve is now quite white, and the arteries small. The field of vision has recovered, shows no scotoma.

Dr. Little (Manchester).—I have seen a fair number of cases of what is supposed to be retro-ocular neuritis, agreeing with Mr. Gunn in his description of them, *i. e.* more or less dimness of central vision coming on rapidly, pain on pressure of globe or movement of eyes, and what patients call neuralgic headache, and generally, but not always, central scotoma. I am excluding, of course, cases due to tobacco or other toxic causes. I have seen them of all degrees of severity. The milder types are apt to be overlooked, as there is so little or no ophthalmoscopic change, and one has to depend for diagnosis chiefly upon subjective symptoms. They rapidly get well without leaving any pallor of the disc.

The severe types are more marked, with central scotoma invariably present, and diminution of sight often great. As an illustration of a severe case recovering, I would mention a case of a little girl who was brought to me fifteen months ago, absolutely blind in both eyes, no perception of light whatever, dilated pupils and no reaction. This blindness had existed for a week, and was preceded by a good deal of frontal headache, and sickness for four or five mornings after breakfast only. The margins of the discs presented very little haze, if any. Between three and four weeks from the commencement of the blindness perception of light returned and the pupils reacted; the outer halves of the optic nerves were then

becoming pale. The vision slowly but steadily improved, and examination of the fields later showed peripheric contraction, large central absolute scotoma in both eyes, and complete absence of colour vision,—a typical case, therefore, of retro-ocular neuritis. In a month or so the scotomata had diminished, and vision for form and colour gradually improved; in less than four months the vision of one eye was $\frac{6}{12}$, of the other $\frac{6}{24}$. I saw the patient again last January, fifteen months from the commencement of the attack. Right eye V. = $\frac{6}{12}$, left V. = $\frac{6}{18}$; good colour vision; fields nearly normal, and optic nerves markedly white and atrophied.

The remarkable point in this case is the recovery of vision when perception of light had been abolished for between three and four weeks, also the amount of sight recovered with such marked atrophic changes in the nerves.

I can point to another case lately under my care, in which perception of light in one eye was lost for a fortnight and yet recovered vision to some extent; it was a case of syphilitic monocular neuritis.

Case 1.—*Retro-ocular neuritis; blindness in both eyes between three and four weeks' duration; recovery.*—I am indebted to our house surgeon, Dr. J. G. Clegg, for the particulars of this interesting case.

K. E—, æt. 11 years, was admitted under my care December 6th, 1895. Right and left pupil widely dilated. No pupillary reaction, no perception of light; the margins of the discs were, if anything at all, slightly blurred; it was said the sight had gone rapidly; the blindness has existed for a week, and was preceded by sickness for four mornings and intense frontal headache. Dr. Henry of Leicester, who saw the girl before she was brought to me, has kindly sent me the following note.

"November 28th.—Both pupils were quite inactive to light and accommodation, no light perception in either eye. The right disc was slightly swollen, the left had some neuritis present. Sight had failed three days ago

FIG. 24.

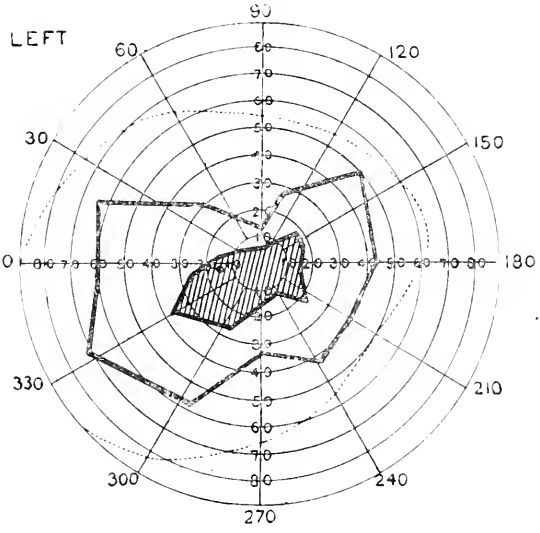

FIG. 25.

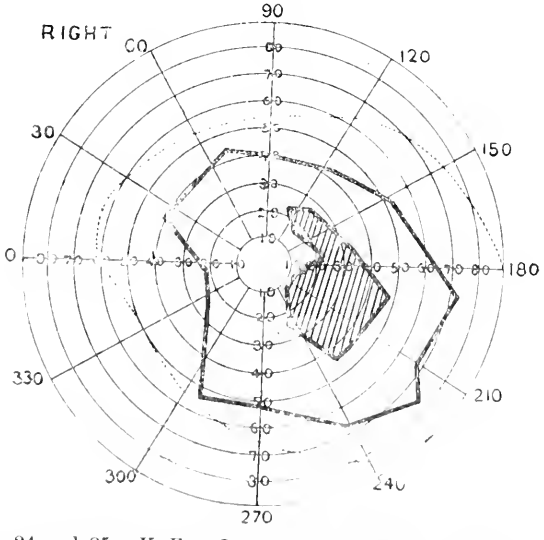

FIGS. 24 and 25.—K. E—, January 13th, 1896. Fields of vision for white; shaded area = absolute scotoma.

Fig. 26.

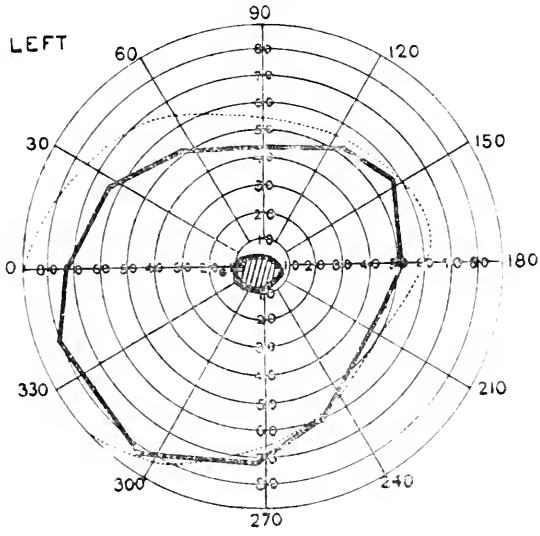

Fig. 27.

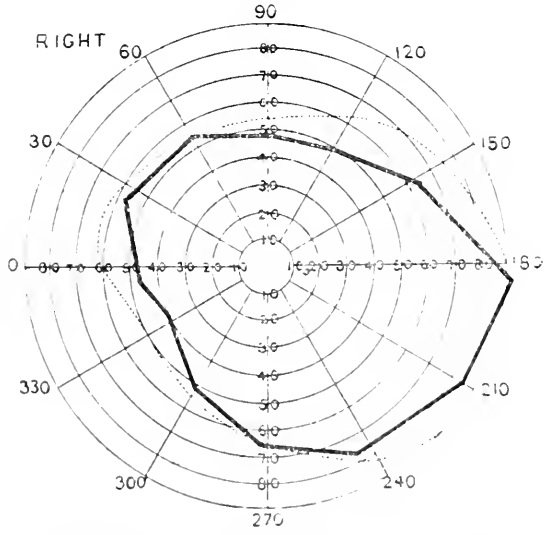

Figs. 26 and 27.—K. E—, February 14th, 1896. Fields of vision for white; shaded area in left = central scotoma.

rather rapidly, with headache and sickness on different days after breakfast.

"December 2nd.—Both pupils acted very slightly to light; V.= p. l. each eye."

Further inquiry into the history showed that during the last twelve months she had now and then tingling (pins and needles) in her feet and hands; this was specially noted on waking in the morning, and lasting for a quarter of an hour. The tingling in the feet was accompanied by a sense of heaviness of the feet; this had also occurred during the last week, with a feeling as if it was impossible to move them, and on movement pain was felt; the girl on admission felt in good health, headache had completely left her. She was a little anæmic; no anæsthesia of body or extremities, knee-jerks easily obtained, no inco-ordination; the left extremities are weaker in extension and flexion than the right; the hand-grasp does not markedly differ on the two sides, but seems to be weak.

December 23rd.—For the first time the pupils acted to light, and perception of light was present in both eyes. The outer halves of the discs were becoming pale. Mist. Pot. Iod. prescribed.

31st.—R. and L. V. = fingers; discs pale, particularly outer halves; veins show here and there empty points, but not dilated. Liq. Strych. and Pot. Iod.

January 13th, 1896.—R. and L. large central scotoma absolute (Figs. 24, 25). R. V. = words of J. 12; perception of deep brilliant colour good; light shades appear grey.

February 14th.—R. V. $\frac{3}{60}$. No scotoma. L. V. = J. 18. Central scotoma much smaller; deep shades of coloured wools recognised fairly easily; fields for white good (see Figs. 26, 27).

24th.—R. V. = words of J. 6. L. V. = J. 18. Scotoma still present.

March 7th.—R. = $\frac{6}{18}$. L. still scotoma.

20th.—R. = $\frac{6}{18}$. Colour perception good. L. = J. 16;

Fig. 28.

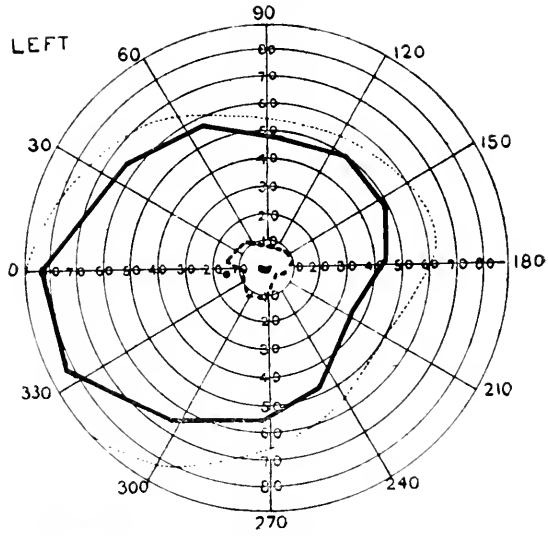

K. E—, March 20th, 1896. Field for white ——; field for blue . . . . . .

Fig. 29.

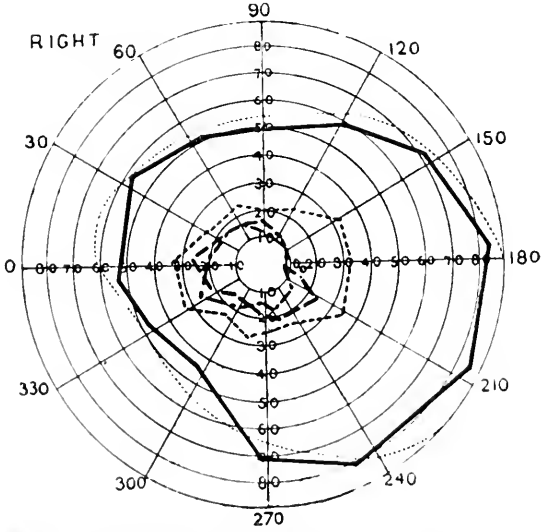

K. E—, March 20th, 1896. Field for white ——; field for blue - - - -; field for green — — — —; field for red - · - · - · -

Fig. 30.

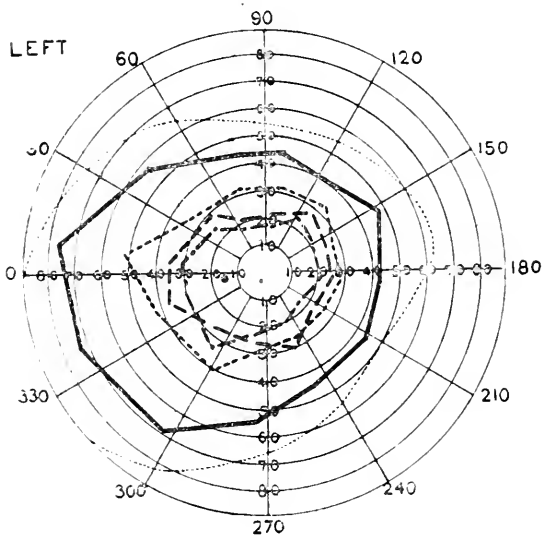

Fig. 31.

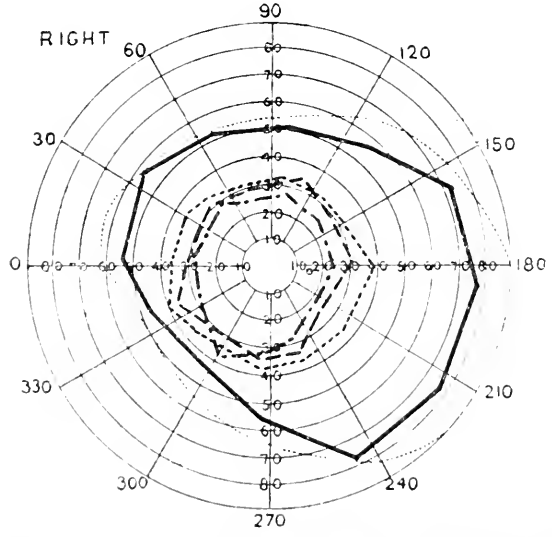

Figs. 30 and 31.—K. E—, April 24th, 1896. Field for white ——; field for blue - - - - - -; field for green — — — —; field for red – - – - – -.

FIG. 32.

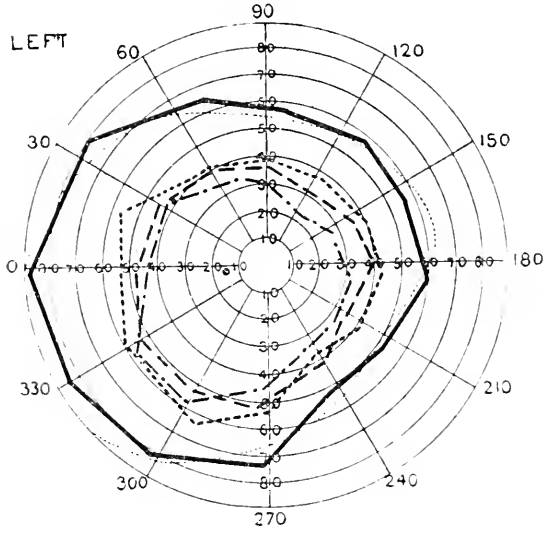

FIG. 33.

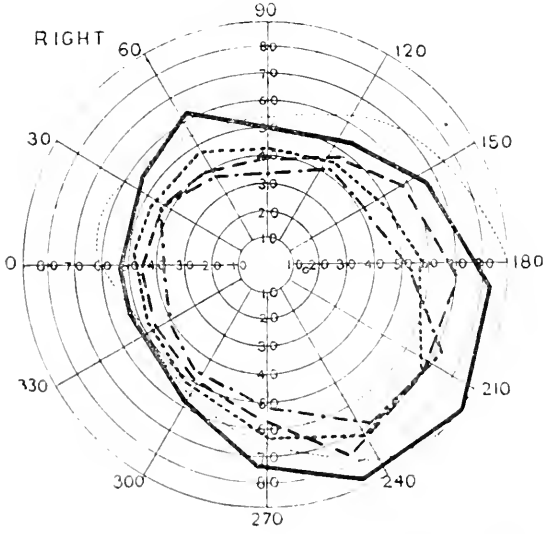

FIGS. 32 and 33.—K. E—, January 19th, 1897. Field for white ——; field for blue - - - - - -; field for green — — — —; field for red – · – · – ·

recognises deep shades of red and green; blue in any shade (see Figs. 28, 29).

April 1st.—R. V. $=\frac{6}{12}$; disc pale all over, outer half white. L. $=\frac{6}{60}$, words of J. 6. Very small scotoma to outer side of fixation point; objects in outer field not so clear as on inner.

24th.—R. $=\frac{6}{12}$, J. 1. Colour vision good, and field fairly large; no scotoma. L. $=\frac{6}{60}$, no scotoma: colour vision improving (see Figs. 30, 31).

January 19th, 1897.—R. $=\frac{6}{6}$. L. $=\frac{6}{18}$; discs very white; central colour perception perfect, fields for colour greatly improved (see Figs. 32, 33); girl in perfectly good health.

The above case appeared to me very hopeless when I first saw it. I did not recognise it at first as one of retro-ocular neuritis, but thought some serious intra-cranial mischief might develop; it, however, turned out to be a typical one of great severity. The remarkable points are the length of time (between three and four weeks) that elapsed before perception of light returned, and the almost perfect recovery of vision for form and colour in spite of the well-marked atrophic changes in the nerve.

I have had another case recently under my care illustrating the total extinction of sight for over a week, and then partial recovery of sight.

Case 2.—A gentleman æt. 28 consulted me on December 1st, 1896. Sight of left eye went rather suddenly eight days ago, and he has not seen the light from fire or daylight since; has had severe pain on same side of head extending to occiput, and also in temple and back of eye; pain on pressure of eyeball, and also on movement; no perception of light; pupil fixed and partially dilated. No abnormal change in fundus; optic nerve same colour and appearance as in other eye. Distinct history of syphilis three years ago.

8th.—Well-marked neuritis and swelling of nerve; almost the appearance of a "stauung's-papille;" faint perception of light.

20th.—Swelling subsiding; sees letters of J. 20.

January 21st, 1897.—V. = 16; field fairly good with hand test, no scotoma; pupil active, disc pale, no swelling.

February 24th.—Sees letters of J. 14; disc atrophied.

No doubt this was a gumma affecting the whole of the optic nerve high up, and the inflammation slowly descending did not show itself at the end of the nerve till later.

The case was actively treated by mercurial inunction.

Mr. Jessop.—With regard to the ordinary symptoms of retro-bulbar neuritis, it seemed to him that there was little to be added to the President's own paper in the 'Transactions' of the Society. Like most others, he had seen cases in which the teeth and also fractures of the sphenoid were apparently the cause of the trouble. He had treated three cases of fracture, and in all of them atrophy of the optic nerve had occurred a month afterwards, as Mr. Nettleship had mentioned in 'St. Thomas's Hospital Reports.'

He had published a case of disseminated sclerosis in 'St. Bartholomew's Hospital Reports' which had come under Sir W. R. Gowers' care. The fields of vision were carefully worked out. The case commenced with diplopia and optic nerve atrophy, and four years afterwards the patient had well-marked symptoms of disseminated sclerosis, and had since died. He was a young man aged twenty-one, and a peculiarity of the case was that the acuity of vision frequently changed, although both nerves presented the appearances of progressive atrophy, being bluish-white in appearance with small arteries. He had also seen the same nerve appearances in two other cases of disseminated sclerosis. It seemed excessively difficult to say that there was any difference between the ophthalmoscopic appearance of an ataxic case and one of disseminated sclerosis. But there was one point that he had not found in locomotor

ataxy, namely, that in this and another case he had seen of disseminated sclerosis the visual acuity kept changing in amount. The field which was within 10° did not change at all. The vision of the right eye in this case was when first seen $\frac{6}{60}$, then improved to $\frac{6}{6}$, and afterwards relapsed until there was no perception of light. Afterwards the vision of left eye was similarly affected, with the same result. This case had symptoms of an appearance of rainbow colours, which persisted in one eye for some time, and the case was thought at times to be one of hysteria. The fields were tried through a grey glass, but through this they were still within 10°. There was no colour scotoma. He had observed three or four cases of diphtheria besides those he had published, with contraction of fields of vision and perfect recovery afterwards.

Mr. Silcock said there were one or two questions which occurred to him after hearing Mr. Gunn's admirable *résumé* of the subject. One was with respect to the frequency with which the macular fibres of the optic nerve were involved. It would be remembered that the author suggested as possible reasons for the affection of these that the lymph circulation was more active through the central portion of the nerve, that the fibres in question were more functionally active than the others, and that they occupied a relatively large portion of the trunk of the nerve. He (Mr. Silcock) ventured to suggest another reason for the frequency of their involvement; it was this: the central fibres of the nerve were supplied by peripheral blood-vessels; any interference with the circulation, such as might be induced by cardiac insufficiency, for instance, or resulting from degeneration of the arterioles, would therefore react upon them more markedly than upon the outermost fibres, about which the circulation was probably freer, and less liable to embarrassment. He would demur to the suggestion that they degenerated because they were most functionally active. He did not

know that any organs readily degenerated because they were most functionally active. As regards the lymph circulation, he would have thought that in this portion of the nerve, the lymph channels being exceedingly small, the circulation would be less active than at the periphery.

Another point which occurred to him in respect of the causation of some of these affections was their connection with high arterial tension. He might mention two illustrative cases, both of which the President also had the opportunity of seeing and examining with him. In one, a man who was the subject of an irregular form of diabetes, the visual acuity had gradually slightly diminished, and a well-marked central colour scotoma had developed. The gentleman saw Sir William Broadbent, who attributed the whole trouble to high arterial tension. Whether that was the true explanation or not he could not say, but as the result of the reduction of the arterial tension, and practically without any other treatment whatever, the colour scotoma had disappeared, and the visual acuity had returned to the normal. It was an interesting fact that with the appearance of a slight amount of sugar in the urine this colour scotoma manifested itself. Whenever the patient took wine, sugar was found in his water a few hours afterwards. The question arose whether in this case they were dealing with a poison acting upon the nerve, or whether the absorption of the alcohol raised the arterial tension and so interfered with the circulation in the central portions of the nerve. Possibly cardiac insufficiency was a factor in the causation of the trouble In many of these cases, especially in chronic alcoholism, they knew definitely that there were changes in the arteries. The walls were thickened and fibrous, the condition being known as angio-sclerosis, permitting an increased transudation from the blood-stream, an œdema of the surrounding tissues being liable to occur. It suggested itself to him that œdema so originating might account for the occasionally transient character of the visual defects which sometimes obtained.

Thus it was in another case, that of a captain in the navy, who was addicted to large excesses in alcohol and tobacco. He had suffered from Bright's disease, from dropsy, and from high arterial tension. When he (Mr. Silcock) saw him (with Dr. Gilbart Smith) his vision was so poor that he practically could not distinguish faces. He had a very definite colour scotoma at that time, and the visual acuity was very low, but his field for white was normal. Ten days subsequently the President saw him with Dr. Gilbart Smith and himself, and the vision was found to have regained its normal acuity. The patient had not entirely given up either his alcohol or his tobacco, but as a result of moderation his arterial tension was very considerably diminished. Therefore he suggested this factor might play a part in the causation of some of these forms of *degeneration* of nerves, as he thought they were, rather than cases of true neuritis.

Mr. Gunn had attributed some cases of retro-bulbar neuritis to cold. It really passed his comprehension how this could be. The optic nerve was very deeply buried in the head, and it was difficult to understand how its circulation could be affected by the external application of cold. Ice was often applied to the head or to the eye, and if the contention were true, people would be liable to retro-ocular neuritis as a result of such treatment. Had anybody ever known this to happen? He found that some authors stated that cold acted by inducing general chilling of the surface. What happened then? Was there supposed to be a rush of blood to the head, and particularly to one optic nerve? Fortunately the number of diseases said to be caused by cold was a vanishing quantity, but perhaps one might use that suggestion until a better was found. There were two other causes which had been mentioned which he would like to hear the opinion of physicians about, and it did seem to him that the subject of debate belonged to the domain of the physician as much as to that of the surgeon, for excluding those cases which were due to a continuity of

lesion, such as periostitis of the sphenoid, or to orbital cellulitis, the nerve changes resulted from some general state with which the surgeon was not generally familiar. Both the words gout and rheumatism had been used. He would like to know what gouty condition was supposed to induce the affection under notice. So in rheumatism, what was meant by rheumatism? Was it the specific poison of rheumatic fever. Dr. Gowers spoke of rheumatic cellulitis of the orbit as a cause of retro-bulbar neuritis; he (Mr. Silcock) was not familiar with this condition. He thought it would be much better not to use terms such as those unless an accurate and strict definition of their meaning was given.

Mr. Holmes Spicer.—The cases of which I wish to speak are the uncured ones, and their possible relationship with other nerve degenerations occurring later. It is not uncommon to meet with patients, chiefly males beyond middle life, in whom loss of sight has come on suddenly without pain in one or both eyes; the loss is of the nature of a central defect, without contraction of the visual fields as a rule. The ophthalmoscopic signs are pallor with a general slight degree of haze of the margins of the discs, and a certain amount of swelling, estimated rather by observation of the parallax of the vessels than by measurable elevation. Another marked feature is an apparent or real constriction of the vessels as they cross over the margin of the disc; it is more often apparent in the veins than in the arteries, but it does occur in the latter. This appearance may be due to a partial veiling of the vessel at this point, but inasmuch as the vessel is quite as clearly visible where constricted as in other parts of its course, it is more probably due to an actual alteration in size of the vessel caused by increased pressure in the nerve. It is true that in nearly all of these cases the patients are or have been smokers, but some of them are very moderate or even nominal smokers; in one case the amount smoked was only half an ounce a week; also no

improvement in vision and certainly no complete cure results in many of the cases from giving up the use of tobacco. So that although possibly not unconnected in their origin with tobacco poisoning, they differ much from the ordinary cases of amblyopia having this cause, in the severity, early occurrence, and persistence of the changes in the optic disc, and in the continuance of the central defect of vision after removal of the cause. It is difficult to follow these patients for any length of time, as they cease to attend hospital when improvement in sight is not obtained, but of seven cases of which I have been able to obtain a history after some months, three of them had definite signs of nerve degeneration in other parts, and one had marked variations in acuteness of vision from time to time—a peculiarity which has been spoken of by Dr. Buzzard as occurring in insular sclerosis. This last patient has now been watched for two years, and nothing further has occurred; but this is not surprising when we consider that in one of the other cases an interval of ten years ensued between the first onset of the affection in the optic nerve and the definite affection of other parts of the nervous system. Most of the other cases were senile ones, and perhaps should be grouped separately as showing a deficient vitality in the optic nerve, although no cause has ever been suggested for the liability to failure of the optic nerve above the other nerves of the body. The interest of this series of cases lies in the difficulty of distinguishing them at their onset from simple tobacco amblyopia. Where the optic nerve changes are marked and of the nature shown in these cases, I should always be cautious in prophesying a cure.

Case 1. *Occurrence of a fit with loss of speech and weakness of limbs twelve months after loss of central vision.*—Thomas M—, æt. 37, was first seen in January, 1895. His sight failed about twelve months ago, and got steadily worse for a time; since then it had remained stationary. He used to smoke three ounces a week, but had given it up entirely. He had some venereal disease when he was

about seventeen. When first seen his vision was $\frac{6}{24}$ in each eye, and could not be improved. His pupils reacted to light. He had a central scotoma for colours which was not sharply defined, his colour perception not being very good anywhere; he had no perception of the colour of a 15-mm. spot of green anywhere; his scotoma for red was absolute for 10° from the fixation point, and was partial for some distance outside this: the scotoma was not absolute for form anywhere. His field of vision for white, tested with a 10-mm. spot, was not contracted. His discs were pale and the edges blurred; there was marked unevenness of the vessels, chiefly of the veins on the O. D. There was a patch of choroidal atrophy in the L. to the nasal side. His knee-jerks were present, but brisker on the left than on the right side.

On March 20th, 1895, the note says that shortly after his last visit he was taken while at work with some kind of fit; he fell back, his mouth was drawn to his right side, and he could not speak. He was assisted home with difficulty, as he could not walk well, and after a few days' rest he recovered his normal condition except for some weakness. His vision had not improved. He was sent to Queen Square and was lost sight of.

Case 2. *Occurrence of weakness of legs and numbness of hands with exaggerated knee-jerks ten years after loss of central vision.*—Charles M—, æt. 38, came to the Metropolitan Hospital June 20th, 1894. The history was that his sight had first failed twelve years before; he attended at Moorfields and other hospitals, and was told to give up smoking, but had never done so. His vision had varied a good deal from time to time, but on the whole had got steadily worse till five months ago, when he had to give up his work as shirt maker. Two years ago he had weakness of the right leg. He never had syphilis. He had had discharge from both nostrils for many years. His memory had recently failed. He still smoked half an ounce of shag a day. When first seen he had weakness of the right leg, which he dragged in walking; there was also slight

weakness of the left leg. There was numbness of the right hand, and of the fingers of the left hand. His knee-jerks were exaggerated, and his equilibrium was not good. His pupils acted to light and with convergence.

Vision.—In each eye he could count fingers at the periphery. He had a very large scotoma for form and colour in each eye, larger in left than in right eye. There was no contraction of the visual field. By the ophthalmoscope, the L. O. D. was very white with a faint blue tinge; the lamina cribrosa was not exposed; the vessels on the disc were not much diminished, but the arteries were relatively smaller than the veins. At the edge of the disc and for a short distance beyond it the arteries were completely veiled, and the veil was prolonged for some distance along the artery as a white sheath. The veins were somewhat uneven in calibre, and there was evidence of thickening of their coats for some distance. The right disc was less pale than the left, but the other appearances were of the same nature as on the left side.

Case 3. *Retro-ocular neuritis; partial recovery of vision with subsequent deterioration; persistence of scotoma; marked changes in the optic nerve.*—Ch. P—, æt. 44, came to Moorfields under the care of Mr. Silcock on March 25th, 1895. His sight had failed entirely in the previous ten days; the failure had come on gradually, and the right eye was worse than the left. Had had some headache. No history of syphilis. He smoked a little.

V. { R., fingers at 3″.
{ L., fingers at 4″.

There was no contraction of the visual field in either eye, but there was a marked loss of central colour vision. The margins of the disc on both sides were blurred, and the disc somewhat hazy. He was put upon a course of iodide of mercury. A month later the sight of the left had improved to $\frac{6}{60}$; five months later it had returned to $\frac{6}{9}$, and that of the right to $\frac{6}{24}$. A year after the onset in March, 1896, V. in the right had again fallen to $\frac{6}{60}$, that of the left remaining $\frac{6}{9}$.

His sight varied considerably at different times under apparently similar conditions of light, &c.; at one time it was $\frac{6}{9}$, at another $\frac{6}{18}$ badly. In November, 1896,

V. { R. $\bar{c}$ + 3 D. sph. = $\frac{6}{12}$.
{ L. fingers at 3′. Fixation imperfect in L.

Both optic discs were very white and sharply cut, like those of primary atrophy; the vessels were normal in appearance. The pupils acted to light. His visual field was quite full with a 10-mm. spot; there was a moderate central scotoma for colours in the left, and a much larger one in the right, absolute for form. He had given up smoking a year before, but had been told he might resume it. He did so, but thought his sight was worse for it, so he gave it up again. On June 18th, 1897,

V. { R. $\bar{c}$ + 3 D. = $\frac{6}{24}$. } Knee-jerks good; pupils act
{ L. fingers. }

to light; has not smoked; his health is good in every way except that he gets depressed about himself.

Case 4. *Double retro-ocular neuritis; persistence of loss of central vision with marked changes in the optic disc.*—John O—, æt. 61, was first seen on January 28th, 1896. His sight had been quite good till about the middle of 1894; then he had attacks of flashes of light in the eyes, quite brilliant like lightning, but he does not remember having any pain. About a week after his sight began to fail; it had varied somewhat till the present time. He smoked about a quarter of an ounce of tobacco a week. When seen—

V. { R. $\frac{6}{60}$, not improved.
{ L. $\frac{6}{60}$, not improved.

Both pupils acted to light. Both optic discs were hazy with blurred edges, and a fair amount of pallor, the left being more pale than the right. In the left, where the vessels cross the edge of the disc, the vein is or appears to be constricted to about half its normal size, but is of normal size at the centre of the disc and beyond the constriction. There was no constriction of the visual fields tested with 10-mm. white spot; there was a large ill-

defined central scotoma for colours, which was absolute for form just outside the fixation point. Knee-jerks absent; equilibrium good; urine 1020, no albumen, no sugar. He remained under observation about three months; no improvement or change resulted. He has since been written to, but no answer has been obtained.

Dr. Risien Russell said he had not much to add to the important discussion in progress, but that as he had made the post-mortem and subsequent microscopical examination of the case of disseminated sclerosis, of which sections were shown by Dr. Buzzard when the discussion was opened, he wished to say a few words on the changes met with. The macroscopic appearances found at the post-mortem examination were identical in every part of the nervous system, and the changes in the optic nerves and tracts were indistinguishable from those met with in the spinal cord, anterior nerve-roots, and so on. On microscopic examination of these structures it was equally impossible to distinguish any differences between the conditions met with in the spinal cord and those which were found in the optic nerves and tracts. The changes in the optic nerves were extremely advanced, and he thought that it was impossible from a study of the sections in this case to say whether the process had been one commencing in the nerve elements and secondarily affecting the interstitial tissue, or whether the interstitial tissue had been primarily diseased and the nerve elements had suffered secondarily. Sections including the optic chiasma, nerves and tracts together, showed that while both optic nerves were completely destroyed in front of the chiasma, and both optic tracts in parts behind the chiasma, there was an interposition of normal nerve-fibres at the chiasma between those completely destroyed parts, a condition of things opposed to Dr. Gowers's view as to the identity of the optic nerve changes in disseminated sclerosis and locomotor ataxy. The process as seen in these parts was simply the random one of disseminated

sclerosis, such as was met with in every other part of the nervous system.

The only other point he wished to emphasise was in regard to the clinical history of these cases. He thought that optic nerve changes were more common in disseminated sclerosis than Dr. Gowers admitted, and that they differed distinctly from the changes in the optic nerves in tabes in that the marked variations of vision so commonly met with in the former affection did not occur in the latter, in which the changes were as a rule steadily progressive.

The sections he had that evening put under the microscopes were from a patient 51 years of age, who, after two or three days with vague pains in the legs, awoke one morning, twenty-five years ago, completely blind, and unable to move his head, trunk, and limbs. By the end of that day he was again able to move his head, and in two days a fair amount of recovery had taken place with regard to all movements, and he had recovered vision in the left eye, but it remained absent in the right. In the course of a few weeks he recovered from his other nervous symptoms, but the blindness in the right eye persisted. He remained completely well until two years ago, when he gradually began to develop spastic paraplegia, and was admitted into the National Hospital, last October, under Dr. Ferrier's care, to whom Dr. Russell was indebted for permission to make use of the case. The illness from which the patient was then suffering proved to be postero-lateral sclerosis.

At that time the condition of his right eye was such that he could just perceive light and the pupil just reacted. The optic disc presented the appearances of simple atrophy, and the vessels were normal. The patient died at the end of November, and the changes found in the spinal cord were typically those of postero-lateral sclerosis. With regard to the optic nerves, the dura mater was extremely adherent just behind the foramen on the right side, so that in removing it a small portion was torn from the

nerve, which was destroyed from the back of the eyeball to just in front of the chiasma.

The sections under the microscope showed how completely the right nerve had been destroyed, while the left appeared quite normal. No evidence of nerve-fibres was found in any part of the right nerve between the globe and chiasma, their place being taken by connective tissue and nuclei, both of which were greatly in excess of normal. These destructive changes terminated abruptly at the chiasma.

Report of the committee appointed to examine Dr. Risien Russell's specimens of optic nerves.

We have examined the sections of optic nerves and tracts from the case of disseminated sclerosis exhibited by Dr. Risien Russell, and have compared them with sections of healthy optic nerves, nerves from another case of disseminated sclerosis, from a case of atrophy in diabetes, and with specimens of axial degeneration of the optic nerve. We are indebted to Drs. Alexander Bruce (of Edinburgh) and R. P. Williamson (of Manchester) for kindly lending some of the preparations which enabled us to make these comparisons.

We are of opinion that in the optic nerve lesions of insular sclerosis there is, in addition to the destruction of nerve elements, a considerable increase of fibrous tissue, shown by thickening of the trabeculæ throughout the nerve. The degenerative process in the optic tracts, chiasma, and nerves is, we believe, random in distribution, similar to that characteristic of the disease in other parts of the nervous system, and quite unlike that known to result from a system degeneration.

From examination of the degenerated portions of Dr. Russell's specimens alone, it is, we consider, impossible to decide whether the morbid process is primarily a degeneration of the nerve elements, or an interstitial change, as the alteration is everywhere so far advanced.

In sections from another case, however, the changes were much less advanced, and the axial part of the nerve chiefly involved. In the peripheral portions, in which the nerve-fibres were but little altered, there was distinct increase in the connective-tissue elements as shown by the greater thickness of the trabeculæ between the bundles. These appearances, we think, indicate that the initial change is an overgrowth of connective tissue.

Walter Edmunds.
J. B. Lawford.
J. S. Risien Russell.

Dr. Macnaughton Jones.—My difficulty, after listening to the members on the last evening, is to know exactly what I am talking about. I find that one of your most distinguished Fellows, and an ex-Bowman lecturer, in his handbook of 'Diseases of the Eye,' 1897, speaking of chronic retro-bulbar neuritis, and discussing the point whether this term should be used synonymously with that of central amblyopia or toxic amblyopia, says, "There is a class of case which is admittedly due to an inflammatory process in the front of the nerve, the causes and symptoms of which are very similar to those of amblyopia. While there was a strong presumptive evidence that the latter affection, often known as toxic amblyopia, was due to a retro-bulbar inflammation, yet direct proof of the fact was wanting. But there is now no doubt that we have here to deal with only one disease." And he refers to Samuelsohn, Nettleship, Walter Edmunds, Uhthoff, and Sachs's researches in support of his view.*

Such a subject as retro-ocular neuritis may be approached from two distinct points of view, the clinical or the pathological. Obviously, under the latter head only such remarks are worth listening to as are the result of direct pathological investigation. Such as are deduced from clinical conditions, correlated to anatomical and

* 'Handbook of Diseases of the Eye,' Henry R. Swanzy, 1897.

physiological facts, may lead us widely astray unless they be substantiated by such observations. The few remarks I make, therefore, are of a clinical character, and I shall only venture to state in a sentence or two the pathological surmise which has been always present to my mind in the treatment of the disease under consideration. Mr. Cross referred to the fact that a permanent scotoma has been occasionally known to follow upon repeated and long-continued attacks of ocular migraine. The knowledge of this fact gave me an early interest in this aspect of the subject, inasmuch as from the age of fifteen I suffered from recurring attacks of scintillating scotoma, attended by temporary amblyopia and hemiopia. Ophthalmoscopic examination during the attacks, and perimetric examinations in the intervals, never revealed anything abnormal. I have a slight hyperopic astigmatism, and my vision is still, in a good light, equal to six fifths. I have never myself seen a case of scintillating scotoma terminate in a permanent central amblyopia. Incidentally, I may here remark that eye-strain associated with astigmatism and its physiological consequences are not to be overlooked as possibly exciting causes of retro-ocular neuritis. Retro-ocular neuritis, in my experience, is an affection generally commencing suddenly, not necessarily attended by pain, monocular, in which the principal ophthalmological symptom is a central scotoma with aberrations in the colour-vision field. The other clinical symptoms are the direct consequences of the scotoma, and the positive clinical signs, both in the pupil and the fundus oculi, in the early stages of the affection, are too uncertain in their occurrence to attach to them any very special importance from a pathological or diagnostic point of view. I have seen cases without any pupillary interferences and no changes in the papilla; and, on the other hand, I have seen hyperæmia of the disc, likewise undue paling of it. Later on the invariable rule has been general pallor, if not absolute atrophy. Furthermore, I believe that the retro-ocular neuritis I

have in my mind is, taken in its ratio to all other optic nerve and retinal affections, comparatively rare in its occurrence. As having a bearing on this point, I looked through the reports of the last two years of the Massachusetts Eye and Ear Infirmary, and the New York Ophthalmic and Aural Institute for 1895, and I find in an analysis of the diseases of 40,561 patients, of which 591 suffered from affections of the optic nerve and retina, that the word "retro" only occurs five times in the compound term "retro-bulbar neuritis," from which affection five patients of the entire number suffered. For my part, I think that the cases of central scotoma in which there are special evidences of disseminated sclerosis should be kept distinct from those which have a purely toxic origin. The difficulty of differentiation is increased by the presumably syphilitic origin of many cases where there are no other evidences of syphilitic lesions in the nervous system or elsewhere to correlate the occurrence of the neuritis with the specific taint. More than a remote history of acquired syphilis, or some not very distinct proof of hereditary taint, cannot at times be found. Those cases I myself have seen, and which would come under the view of the affection I have just expressed, I might divide under three heads in their order of frequency: (1) Alcohol or tobacco, more frequently tobacco; (2) both combined; (3) syphilis. These causes I regard as primary and essential factors, but the ocular manifestation is generally brought about by some associated source of irritation or predisposing influence. This may be gout, grief, mental worry, or eye-strain. The following are a few not very complete details of an interesting case.

A gentleman æt. 53 consulted me in May, 1896. He was in robust health, though he had been for some time rather overworked and harassed in the management of a large business. The symptoms came on rather suddenly. Here is a description in his own words: "When my eye is bad it is like a mist or spot before it, and on looking at a newspaper there appears a spot about the size of a

halfpenny, as if it had been rubbed while the ink was wet. If I keep my eye quite still a moving object disappears and comes into sight again." He was an excellent shot, and the first thing he had noticed was that on covering the bird with the gun it suddenly disappeared and came into view again. His vision, on examination, I found to be with the affected eye nearly six sixths. There was an absolute scotoma of this eye. At the time he was wearing distance glasses — 1 cyl. for the right eye and plane glass before the left; near glasses + 1 D. sph. and + 0·75 cyl. for the right, and +1 D. and +0·5 cyl. for the left. There was no indication of any affection of any other organ save the eye. As I only saw him twice, I recently wrote to him to inquire his present condition; and his answer was, "Since I saw you the last time the eye has gradually improved. The spot first appeared less dense, then like looking through a piece of bead-waving glass. Now the eye is about the same as the other, though occasionally I fancy there is a little flicker, but there is very little difference between the two eyes."

This gentleman was not what would be called a very great smoker (he used but three ounces a week of Wills's Gold Flake Mild Honeydew), and took very little alcohol. I placed him first on a mixture of strychnine, iodide of potassium, and santonin. This he took alone for some time, when I made him take alternately with it a mixture of perchloride of mercury and bark. Ophthalmoscopic examination showed nothing pathological in the fundus. The only possibly attributable cause in this case was tobacco, the use of which, with alcohol, I made him abandon. He had never suffered from migraine or giddiness, and had a family of robust and healthy children. There was no history of syphilis.

Clinically I have always regarded such cases as coming under two heads,—the first functional and temporary [such functional disturbance may pass into organic change if it be allowed to continue unchecked: take for example traumatic neurosis, a dental (reflex) scintillating

scotoma, and the toxic agents, alcohol, nicotine] ; the second pathological, consequent upon (*a*) parenchymatous or interstitial changes in the optic nerve, (*b*) sclerotic changes in the central artery, (*c*) thrombosis of the latter. Negative clinical evidence in discussing the ætiology of any pathological condition has a certain value. Permit me, then, to say that out of some thousands of cases of auditory nerve trouble, I cannot recall to recollection one suffering from true central scotoma, though I have seen many cases of amblyopia and migraine associated with tinnitus. This is worth observing, as the occasional correlation of middle ear disease and optic neuritis is well recognised.

Neurasthenic conditions and hysteria have been regarded as causes of functional scotoma. I am very sceptical as to that ambiguous condition "hysteria" ever itself bringing about retro-ocular neuritis, of a functional or other nature. For some thirty years I have done no inconsiderable amount of work in the field of obstetrics and gynæcology. I have seen associated with various diseased conditions of the pelvic organs different retinal affections, such as retinal hyperæmia, optic neuritis, retinal infarctions, and thrombosis of the central artery, with functional amblyopia and ocular migraine. In some of these cases, notably where a syphilitic cause was traced, a central scotoma has been present, but they were not cases of hysteria, and I have never known a single instance of retro-ocular neuritis in a woman associated with any affection of the pelvic organs, in which some definite lesion of the optic nerve or retina was not present to account for it. Often as I have seen ocular symptoms present before and during pregnancy, and observed various pathological conditions of the retina in relation with these, I cannot recall to mind a single instance of a true central amblyopia not due to albuminuric retinitis, or associated with retinal hæmorrhagic infarctions.

If retro-ocular neuritis be an occasional result of zymotic disease, as, for instance, scarlet fever, its con-

nection as a sequel I should say must be explained by the presence of such toxic agents as find their way into the blood during and after the zymotic attack, and the consequent interstitial nervous and vascular effects. Some 2500 cases of different forms of zymotic disease passed under my individual care in hospital. I have never seen retro-ocular neuritis as a sequel. With a fairly large experience I have never known it to follow on acute rheumatism. Gout alone, the ever-ready crutch on which we lean in cases of ætiological obscurity, I have not known to cause retro-ocular neuritis. Some years since I devoted special attention to the subject of dental reflexes (including those occurring in the eye). Retinitis, optic neuritis, and serous iritis I have myself seen associated with dental caries, never retro-ocular neuritis. I incline, therefore, to view the affection that I know as retro-ocular neuritis as one which has for its cause (apart from any direct constriction of and pressure on the optic nerve through orbital disease) either alcohol, tobacco, or syphilis. Such toxic irritants may bring about the associated vascular or interstitial nerve degenerations.

Finally, I believe that the treatment resolves itself into the administration of such specific and absorbent medicines as mercury, the iodides of potassium and strontium, with such nerve tonics as strychnine, phosphide of zinc, and chloride of barium. In the case I have quoted, as in others, I gave santonin. I believe it to be a retinal stimulant too little used.

Mr. W. Adams Frost.—The following remarks refer only to the distinct clinical group known as "Acute Retro-ocular Neuritis." Since 1887 I have seen thirteen cases in which I made this diagnosis. I have notes of several other cases of sudden failure of vision which may have been of the same nature, and it is possible that some of my thirteen cases may by some be considered as doubtful. I append notes of these thirteen cases. The following

is a summary of the conclusions which, it seems to me, may be drawn from them.

The failure of vision is usually monocular. In only two (5 and 6) did both eyes fail simultaneously. In one other the second eye was attacked a year and a half after the first (Case 2). In Case 9 there were subsequently temporary attacks of blindness in the second eye, but these were evidently of a different character from the single attack in the eye first affected.

The failure of vision is always rapid, and is usually described by the patient as sudden. It does not, however, reach its full intensity at once, but continues to increase for a period varying from one to three days.

When the defect is at its height there is frequently no perception of light over any part of the field. Thus in five of my cases (4, 7, 8, 9, 11) there was no perception of light at the time of my examination. In two others (1 and 13) perception of light was said to have been absent at first.

In the majority of cases ophthalmoscopic signs are slight or absent. When present they usually consist in slight muddiness of the disc, slight hyperæmia, or both.

In two cases (2 and 5) which began in the same way papillitis subsequently appeared. In Case 2 this only happened in the second eye; the other eye had had a typical attack a year and a half earlier. In Case 5 both eyes were attacked simultaneously.

Considering the severity of the attack, the prognosis appears to be very good. Thus, out of my thirteen cases, recovery was practically complete in seven (1, 2, 5, 8, 9, 10, 12). In three others (6, 7, 13) there was considerable improvement, but recovery was not complete at the date of the last note.

In one there was improvement to hand-movements (4), in another (11) to perception of light.

In one (3) the progress was not recorded.

In all the improvement took place first in the periphery of the field.

A central scotoma is present at some stage so constantly that it may be looked upon as an essential symptom. Its presence was noted in all my cases. The scotoma was absolute in all but two (3 and 13).

In several cases of absolute central scotoma the pupil only acted when light was thrown on to peripheral parts of the retina.

Subsequent pallor of the disc is noted in five cases (2, 4, 9, 11, 12). Notwithstanding this, in three (2, 9, 12) vision was practically normal.

Some doubt has been expressed as to whether perception of light is ever really lost for any considerable time and recovered. My cases establish this beyond doubt. In all recent cases the test used was a 16-candle electric lamp, concentrated upon the eye by a lens.

Cases in which p. l. was lost and regained.

Case 4.—Seen nine days after loss of vision; no p. l. On twenty-first day p. l.; it was said to have returned on the eighteenth. This patient could only see light when it was first thrown upon the eye; after a few seconds it disappeared, although it had not been moved. Four weeks after the attack V. only hand movements.

Case 7.—Seen nine days after the loss of V.; no p. l. It was still absent on the thirteenth day. On the thirtieth, fingers counted at periphery. P. l. said to have returned on the twenty-second day. V. at last note (undated) $\frac{4}{60}$.

Case 8.—On the third and fourth days no p. l. It was present on the sixth, and was said to have returned on the previous evening. Complete recovery took place.

Case 9.—No p. l. on fourth day. It returned on the sixth, first on the nasal side of the field. Complete recovery.

Case 11.—No p. l. on eighth day. It was still absent on the fifteenth. It was present on the twenty-second day,

and was said to have returned on the nineteenth. Up to the present time, five months after the attack, V. has not recovered beyond p. l.

Direct pupillary action was always absent when there was no p. l., but its consensual action remained. The recovery of pupillary reaction was sometimes incomplete at first, in the sense that the pupil, after contracting to light, would again dilate, and remain dilated while the light was still on the eye.

Tenderness of the eye to pressure, or pain on movement, is noted in five of my cases (2, 3, 8, 10, 11).

Notes of the Cases.

Case 1.—Dr. V—, æt. 70, first seen February 19th' 1887, at 9 a.m.

History of attack.—On the afternoon of the previous day, on waking after a nap, found that he was blind with L. E. (R. E. had long been useless from cataract) ; could not see a candle held close to eye.

Condition when seen.—P. l. in periphery of field, not in the centre. Ophthalmoscopic appearance normal.

Progress.—Fifteenth day could read newspaper type, but misses centre letter of the words ; six weeks after attack could read 1 J. Small central scotoma. Four months after attack V. $\frac{4}{9}$ and 1 J.

Case 2.—Miss C—, æt. 22, a nervous excitable woman, first seen September 19th, 1888.

History of attack in L. E.—Found on waking one morning that she was unable to see with L. E. (four days previously she had had severe neuralgia in the left temple ; this had nearly gone the next day, but recurred on the third day).

Condition when seen.—She was seen by Mr. Lawson on the eleventh day. V. then letters of 19 Jaeger, puzzled out. The disc was "muddy-looking," its outline hazy, and the smaller vessels on it were not well seen. The R. E. was normal. She was seen by me on the thirteenth

day, she stated that vision was very bad, less than $\frac{6}{60}$, but by persuasion I got her to see $\frac{6}{6}$. Ophthalmoscopically there was a very slight haziness of the disc margin. I did not at this time see the patient again, but I subsequently heard that the eye completely recovered in a few days.

History of attack in the R. E.—A year and seven months after the attack in the L. E., V. of R. E. failed rapidly, and continued to get worse for two days.

Condition when seen on the fourth day.—V. letters of 19 Jäger. V. F. normal in extent; there is no note of a central scotoma having been searched for. Decided tenderness on pressing the eye back into the orbit. The disc margins were thought to be a little hazy, but I was doubtful whether this exceeded physiological limits. I sent her to see Dr. Sharkey, who could find nothing wrong in her general health. Blister to the temple; mercury internally.

Progress (sixth day).—V.: could see black and white of 20 Jäger, but could make out no letters. Could not count fingers. V. F. normal. No central scotoma, but the test object would occasionally disappear for a time in different parts of the field. The blurring of the disc margin was now no longer doubtful.

Seventh day, more blurring but very little swelling; veins distended. The papillitis reached its height in two or three days, and then gradually subsided. V. began to improve on the tenth day. The improvement occurred first in the periphery of the field, so that while objects in the room which were in the periphery of the field could be made out, the light of a candle could not be seen when it was directly in front of the eye. Four weeks after the attack the disc margin was nearly clear, and the disc was somewhat pale; V. 10 Jäger. A month later V. $\frac{6}{9}$.

Case 3.—Alfred E—, æt. 42, first seen April 13th, 1889.

History of attack.—Vision of L. E. failed two weeks ago; the failure was not sudden, and was preceded by tenderness of the eye.

Condition when seen.—L. E. V. $\frac{6}{24}$. Central scotoma radius 20°—40°, not absolute anywhere, but densest towards the centre.

Ophthalmoscopic examination. — Slight blurring of margin of O. D.; veins full.

Previous history.—A month before the attack had sciatic rheumatism.

Progress.—Not noted.

Case 4.—Sarah P—, æt. 64, first seen August 26th, 1887 (S. G. H., 609, 187).

History of attack.—Nine days ago, on getting up in the morning, discovered that the R. E. was blind.

Condition when seen.—R. E. no p. l. Margin of O. D. slightly blurred.

Progress.—Twenty-one days after attack p. l. over the whole field. The light is only seen when first thrown upon the eye, in a few seconds it again disappears (p. l. said to have returned on eighteenth day) ; O. D. blurred slightly. Some pallor, vessels thought to be smaller than normal. Four weeks hand movements in the periphery of the V. F. only.

A later note states that the patient died with cerebral symptoms five months after the attack.

Case 5.—Miss B—, æt. 18, first seen by me September 19th, 1889.

History.—A well-grown healthy girl of active habits. She had been on a holiday in Scotland; the weather was bad, and she had been getting wet through on most days, but was not conscious of any chill. She had not suffered from rheumatism, and had always had good health.

History of attack.—While travelling from Scotland to London by train she noticed a dimness of vision; this rapidly increased during the next two days.

Progress.—On the third day she was seen by an ophthalmic surgeon, who found vision very defective. The fundi were normal except for slight indistinctness of the margin of each disc, which was thought to be physio-

logical. On the sixth day the same surgeon found V. worse, and there was well-marked papillitis in both eyes.

She was treated with mercurial inunction, blisters, and iodide of potassium.

I saw her on the tenth day. V. was then R. E. bare p. l., L. E. $\frac{1}{18}$. There was no contraction of the visual fields, but an absolute central scotoma was present in each. The disc margins were quite indistinguishable, but the discs were not much swollen. The retinal veins were distended. She was then treated by intra-muscular injections of mercury. I did not see the case again, but I heard that she recovered completely.

Case 6.—Philip P—, æt. 44, first seen August 13th, 1892.

History of attack.—Dimness of both eyes noticed ten days ago. This increased for two days, improved, and then relapsed.

Condition when seen.—V. each eye $\frac{6}{60}$, absolute central scotoma in each.

Progress.—Eleventh day, V. each eye $\frac{6}{24}$, no scotoma. Fourteenth day, $\frac{6}{18}$ each eye.

Case 7.—Ethel S—, æt. 20, first seen June 24th, 1893.

History of attack.—Nine days ago noticed dimness of L. E., which she thinks got worse rapidly up to the time of her visit.

Condition when seen.—L. E. no p. l. No direct action of pupil to light. Retinal veins a little full.

Progress.—Eleventh day, still no p. l. Slight blurring of disc margin. Thirteenth day, still no p. l. Thirtieth day, counts fingers and sees large objects at the periphery of the field only. Said that p. l. returned on the twenty-second day. Central scotoma 10° radius. Later note (undated), V. $\frac{4}{60}$.

Case 8.—May J—, æt. 18, first seen November 13th, 1895.

History of attack.—Three days ago noticed defect of L. E, which has since increased.

Condition when seen.—L. E. no p. l. No direct action of pupil. O. D. hyperæmic, veins full. Tenderness on pressing eye.

Progress.—Fourth day of attack, still no p. l. Sixth day, p. l.; this was first noticed by the patient on the previous evening. Eighth day, counted fingers. Tenth, read 18 Snellen near; central scotoma having radius of 5°. Colour V. defective. Seventeenth day, $\frac{6}{18}$. Twentieth, $\frac{5}{9}$, $\frac{6}{9}$. Two months after attack ophthalmoscopic appearance normal, V. $\frac{6}{6}$ letters.

Case 9.—Miss H—, æt. 24, first seen December 18th, 1895.

History of attack.—Four days ago, on getting up, noticed a cloud in the centre of the field of L. E.; this increased in density and extent, and on the second day from the attack she could only see large objects in the periphery of the field. On the fourth day she was seen by Dr. Sell, her medical attendant, who found that there was no p. l. in this eye, and no reaction of the pupil. She was seen by me the same day.

Condition when seen.—L. E. no p. l. No direct action of the pupil. Ophthalmoscopic appearance normal.

Progress.—Sixth day, some return of p. l., first on the nasal side of the field. Thirteenth, counts fingers easily in all peripheral parts of the field, but there is a large central area over which there is no p. l. The pupil only acts when light falls upon peripheral parts of the retina. Twenty-fifth day, V. $\frac{6}{9}$ (letters). She thinks that she sees better in the peripheral parts of the field, but I could not confirm this with the perimeter. Colours seen well in all parts. Seventh day, colour vision very defective, no colours being recognised or distinguished from each other. Tonsillitis commencing. Twenty-third day, V. $\frac{5}{18}$, could distinguish red from green. Six weeks after attack V. $\frac{6}{6}$ one letter. No scotoma for white using a 20 mm. square.

Previous history.—For some years has suffered from muscular pains in damp weather. Headaches in the morning for about a year.

Subsequent history.—Seen March 24th, 1897. The L. E. has given no further trouble. V. $\frac{6}{5}$, V. F. normal. No scotoma. The O. D. is paler than that of the R. E., and is a trifle paler than normal.

In the R. E. since November last there have been four attacks of partial blindness only lasting five minutes. These attacks have occurred at all times of the day, and have usually been preceded by headache; but she is subject to headache, and has never been able to predict the onset of an attack. She describes the attack as a dimness coming over the whole field at once, preventing her from seeing any objects, but not causing loss of p. l. Recovery commences after about five minutes, and takes another five minutes to be complete. The recovery is said to occur over the whole field at once.

Case 10.—Agnes F—, æt. 19, first seen January 19th, 1897.

History of attack.—Sudden failure of V. in R. E. seven days ago. This had been preceded for a few days by pain on moving the eyes laterally. V. continued to get worse for five days, remained stationary since.

Condition when seen.—V. letters of 20 Jäger with eccentric fixation. Absolute central scotoma, measuring $30^{\circ}\,{}^{28^{\circ}}_{8^{\circ}}\,22^{\circ}$. No peripheral contraction of visual field.

Progress.—Ninth day, scotoma smaller. Twenty-first day, very small scotoma. Four weeks after attack, V. $\frac{6}{24}$; five weeks, $\frac{6}{18}$; six weeks, $\frac{6}{12}$; nine weeks, $\frac{6}{6}$, letters. Central scotoma for green, not for white.

Case 11.—Frank B—, æt. 26, first seen October 21st, 1896.

History of attack.—Eight days ago discovered on rising that vision of L. E. was reduced to shadows, the next it was worse, since then he thought it had remained the same.

Previous history.—Ten months ago suffered from left-sided paresis, which was attributed to cerebral embolism. There was a loud and rough cardiac murmur, which is still present.

Condition when seen.—L. E.: pressure on the eye causes pain. V. no p. l. Pupil acts consensually, but not to direct light. O. D. slightly congested, veins rather full. The macular region was normal, and the vessels pulsated in the usual manner on making pressure on the globe.

Progress.—Fifteenth day, no p. l. O. D. margins slightly blurred. Twenty-second day, p. l. in the periphery of the field, not in the centre. Pupil acted slightly. P. l. said to have returned on the nineteenth day, nine weeks after the attack; p. l. still absent from the centre of the field. It was noticed that the pupil contracted imperfectly to light, and that after about three seconds it again dilated, the light remaining unaltered. Slight pallor of the optic disc.

Case 12.—Louisa H—, æt. 20, first seen May 5th, 1896.

History of attack.—Vision of L. E. noticed to be defective six days ago, got worse for two days, has since remained stationary.

Condition when seen.—V., hand movements in periphery of field, an absolute central scotoma (an area in which electric light concentrated by a lens was not seen). The area of the scotoma was not mapped out.

Progress.—Sixteenth day, no change; a month after the attack could count fingers; two months after attack, V. $\frac{6}{36}$, O. D. pale; three months after attack, $\frac{6}{18}$; four months, $\frac{6}{12}$; five months, $\frac{6}{9}$; and a fortnight later, $\frac{6}{6}$.

Case 13.—Annie T—, æt. 36, first seen February 18th, 1896.

History of attack.—Vision of R. E. failed seven days ago, continued to get worse for five days, when V. was no p. l. according to the patient's statement.

Condition when first seen.—V., R. E. hand-reflex over the whole visual field; central vision appeared to be worse than peripheral, but no definite scotoma could be made out. Pupil acted sluggishly to light, consensual movements normal. Ophthalmoscopic appearances normal.

Progress.—Seventeenth day, V. $\frac{6}{36}$; twentieth, $\frac{5}{18}$; four months after the attack, $\frac{5}{12}$.

Mr. R. W. Doyne.—On looking through my case-books for some years back, and after eliminating all hereditary cases and those due to tobacco, and any in whom there were definite changes at the macula, and also any cases notes of which were incomplete through the patients having passed from observation before a final result was noted, I find twenty cases remain with full notes and charts of the visual fields. It has seemed to me that the majority of these cases fall into two more or less distinct classes—the binocular cases and the monocular cases. This differentiation does not seem to me to be an artificial one, for each appears to have characteristics of its own, though I would not exclude the possibility of one eye only being affected by the binocular type (and certainly an interval is not uncommon) in the same way as interstitial keratitis occasionally may only attack one eye; or on the other hand, the second eye being attacked by the monocular type. The distinctions between the two appear to me to be as follows.

The binocular type usually affects men, and presents less acute symptoms of optic neuritis which come on later than in the monocular type. It also tends very much less to recovery. Of the twenty cases I mentioned eleven were of this type, nine of whom were men and only two recovered, one man and one woman. (By recovery, I mean they regained at least $\frac{6}{12}$ of normal vision.) On the other hand, in the seven monocular cases five were women, two were men, and all recovered; the affection of sight was in most much more gross at the beginning than the binocular type, and the symptoms of the optic neuritis much more marked, though in none of the cases were the discs affected to anything like the degree seen in cases of cerebral tumour. It is noticeable, too, that those cases whose notes are incomplete, having no final result recorded, are of this type, suggesting, I think, the proba-

bility that they recovered and therefore ceased attending. It has appeared to me that nearly the whole number of cases of monocular optic neuritis fall into the category of so-called retro-bulbar optic neuritis. I have never in my own experience seen optic neuritis clearly due to cerebral tumour, or some such gross central cause, affect only one eye, though I am not for a moment prepared to say that such cases do not occur. The remaining two cases were probably of the type spoken of by Dr. Buzzard, one man and one woman who had nystagmus and other symptoms of insular sclerosis, and in whom, after rapid and extreme loss extending over weeks, almost normal vision was recovered. The only other peculiarities I have noted are that in two cases loss of power in one leg was observed ; and in one binocular case which did not recover, somewhat gross symmetrical hæmorrhages in the course of the vessels up and in from the discs were observed, though the discs and vessels did not appear to me to show any obvious affection. It is right, however, to mention that on this point a very competent observer who saw the case with me was inclined to differ. In these retro-bulbar cases the pupils are often spoken of as acting sluggishly, and if the word " sluggish " is meant to convey that the reaction is slight in degree I have no objection to make to the suggestion, but some photometric observations I have made on the reaction of the pupil in these cases show that though slight in degree, the latent period and curve of reaction are identical with that of a normal pupil. With regard to the subsequent dilatation that Mr. Gunn has spoken of, my observations do not satisfy me that, although it is certainly greater in degree, it is really different in character from that which occurs in the case of a normal pupil.

The PRESIDENT said that it seemed clear they were not all speaking about the same disease. It was evident that the term retro-ocular neuritis had to cover several different varieties ; and although it was generally recognised by the

speakers that such was the case, some had laid more stress on one, and others on another. They had not yet exhausted the history of all the forms of the disease.

He had looked through his own cases, and put them into such clinical groups as seemed to him most natural; and he thought that these groups would, to a great extent, agree with those referred to by other speakers. He had notes of 120 cases which could be put under the title retro-ocular neuritis. One group was that to which Mr. Gunn largely addressed himself, consisting of what might be called the single idiopathic cases. He would be inclined to make a sub-group of all those single cases which recovered, and a second of cases which did not recover. In neither of those groups of single cases were there any nervous symptoms—that is, general nervous symptoms. There might be local symptoms, such as paralysis of one nerve, but that only in a few cases. Between these two sub-groups of ordinary single cases which recovered and those which did not recover he would make certain differences. In the first place, the sub-group which recovered was very much the larger. He had about fifty-four cases of this variety, in which one optic nerve was affected acutely, and recovered more or less completely. In regard to the sex of those fifty-four cases which recovered, thirty-eight were female and sixteen male; in regard to age, not one of the cases was younger than sixteen, and only nine of them were over forty; the great bulk of those cases, so far as he had observed them, were between twenty and forty. Many points of interest might be mentioned about that group if time permitted. In a certain number of the recovering cases the patients had had syphilis, and in a very few of them there was fair reason to put down the symptoms to gumma on the optic nerve; but in the vast majority syphilis had no share in the attack.

In the second sub-group of single cases, namely, those which did not recover, the numbers came out very differently. There were only nineteen in all, eleven being

women and eight men. The age also was very different from that of the recovering cases, for of those which did not recover only six were under forty, and thirteen over forty, *i. e.* the average age was much greater.

He thought there were other marked differences between these two sub-groups as a rule. On the whole, the pain in the non-recovering cases was much worse and lasted longer than in those cases which recovered in the latter,—indeed, the pain very often ceased before the patient noticed the sight fail.

Further, he would say that ophthalmoscopic changes in the recovery cases were present early, taking the form of more or less haziness of the disc, and sometimes papillitis. In some of those which did not recover, but which went down to no perception of light, although there was a good deal of severe and lasting pain, often nothing could be seen for the first three or four weeks, and then the disc became pale. It seemed likely that in the cases with transient pain, early ophthalmoscopic changes, and recovery of sight, the disease was not far behind the eyeball ; whilst in those where pain was severe and prolonged, ophthalmoscopic changes late in appearing and sight permanently lost, the seat of disease was probably in the optic canal.

There was another but small group of cases—he had had only five—in which both eyes failed, usually within quite a short interval, and both recovered. He would not go into details about them on that occasion. One of the cases was published in a paper in the fourth volume of the 'Transactions' (1884). Of these five cases three were men and two women, all between the ages of twenty-three and thirty-five. Very rapidly, *i. e.* in a day or two, the patient became almost blind in one eye. This eye recovered in two or three weeks, but before it was well the second eye began to fail, so that the attacks overlapped. The discs remained pale. The case he published in 1884 was seen again ten years later, and the patient was as well as if nothing had happened.

In another group, really physicians' cases, of which he had watched a few well-marked examples, both eyes were attacked, but with a longer interval, and the whole case spread over a much longer time. In some of them the sight recovered and failed again repeatedly. He supposed a large proportion of these were, or would eventually develop into, cases of disseminated sclerosis. In some of them the ophthalmoscopic appearances had been comparatively slight.

He had not seen many cases of retro-ocular neuritis in which the teeth were the cause of the trouble, but he had had three in which it was reasonable to think that acute inflammation of the sphenoidal sinus was responsible for retro-ocular neuritis.

Mr. Edward Roberts.—Among my cases of retro-ocular neuritis I have only included those of an acute nature, and which I have seen soon after the commencement of the disease. Of the six cases, there was a decided history of rheumatism and exposure to cold in three, no cause could be found in two cases; in the remaining case there had been ptomaine poisoning, but it is doubtful whether it was the cause of the neuritis. The treatment in all my cases has been blistering the temple, and giving iodide of potassium in twenty-grain doses. Five out of the six cases have completely, or nearly completely, recovered; the sixth case did not come under treatment until atrophy of the nerve had commenced. I should like to draw attention to Case 4. In cases of retro-ocular neuritis it is the rule for the macular bundle of fibres to be chiefly affected, but in this case the peripheral fibres only were affected. This makes me think that the vascular supply to these two sets of fibres is different.

Case 1.—Miss D—, æt. about 21, was brought to see me by Dr. Nolan on May 19th, 1895. Miss D— had been sitting at an open window on May 12th. The same evening the sight of the right eye began to fail, and the

next day it was blind. She had suffered much from rheumatism, but otherwise her health was good.

May 19th.—Right eye: pupil slightly dilated and sluggish; fundus quite normal. Vision: hand at upper part of field; field absent except above. Left eye normal in every way. Pot. iodide gr. x, t. d. s. ordered, and a blister to be applied daily to the right temple.

31st.—Right eye: counts fingers; there is a large, absolute central scotoma. Iodide increased to gr. xx t. d. s. Patient sent to Buxton, and hypodermic injections of strychnine ordered.

June 6th.—Right eye: $\frac{5}{1\frac{5}{2}}$ and J. 4. Field good; no absolute scotoma, but a central scotoma for red when eye is tired.

21st.—Right eye: $\frac{6}{6}$ and J. 1. Field normal; disc has become decidedly pale. All treatment stopped.

Case 2.—Miss W—, æt. about 19, was sent to see me by Dr. Williams-Jones on April 13th, 1896.

On April 1st Miss W— rode on the outside of a tram, and afterwards had severe pain in the left temple and eyebrow. On April 3rd again went on the outside of a tram, and that day it became very painful to move the left eye in any direction, and the sight of this eye began to fail. Miss W— had scarlet fever followed by rheumatic fever in 1895.

13th.—Left eye: vision letters in J. 20; pupil had been dilated with atropine; there was slight softening of the lower margin of the disc; field taken with 20-mm. white test object showed no peripheral loss, but a large, absolute, central scotoma (Fig. 34). Red and blue were recognised at periphery of field; yellow and green were called pink. Right eye: vision $\frac{6}{6}$ and J. 1, and eye quite normal in every respect. Potassium iodide gr. x, t. d. s. ordered, and a blister to be applied daily to the left temple.

19th.—The sight of the left eye is J. 16, and no scotoma is to be made out with a piece of paper held in the hand. Iodide increased to gr. xx.

23rd.—Left eye: vision $\frac{6}{9}$ and J. 1, but patient says that there is a kind of mist before the sight. Field taken with perimeter and found to be normal; there was no scotoma of any kind. Afterwards the disc became decidedly pale, but the vision remained good.

Fig. 34.

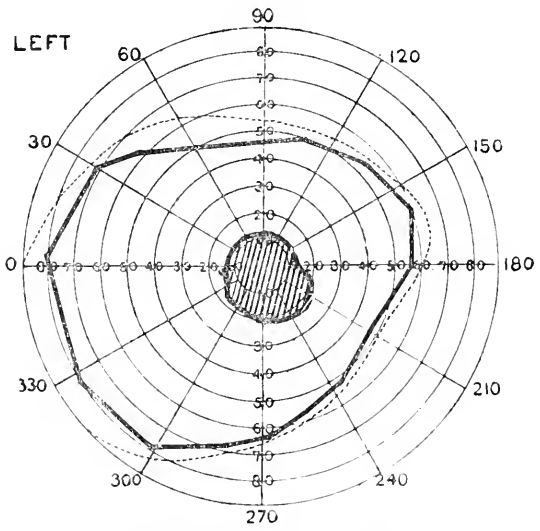

Miss W—, April 13th, 1896.

Case 3.—Miss M—, a young woman, was sent to me by Dr. Thompson of Buxton.

On June 12th, 1896, patient noticed something before the sight of the right eye, and next morning she found this eye to be nearly blind. The health was quite good; there was no history of rheumatism, or of the girl having been exposed to any chill. The family history was good. I first saw the patient on June 20th. The right pupil was then somewhat dilated and fixed; there was no perception of light in the right eye, and there was faint optic neuritis. The left eye was quite normal. Pot. iodide gr. xv was ordered three times a day, and a blister to be

applied daily to the right temple. Patient began to see the light with the right eye on June 28th.

July 2nd.—Right eye : counts fingers at periphery of field. There was a large, absolute, central scotoma. The neuritis was more marked than on June 20th, and there was a small hæmorrhage in the retina just above the disc.

27th.—Right eye $\frac{6}{12}$ and J. 1. Field somewhat contracted, but the central scotoma has disappeared. The neuritis and hæmorrhage have disappeared, but the disc is decidedly pale. Blisters and iodide stopped, and hypodermic injections of strychnine ordered.

August 17th.—Right eye $\frac{6}{9}$ and J. 1. Field has improved, but is still slightly contracted all round ; there is no scotoma.

Case 4.—Miss L—, æt. 38, came to the Manchester Eye Hospital on July 21st, 1896.

While returning home from work yesterday patient thought she could see something black on the right side of her face ; could see with the right eye. The previous day Miss L— had been sitting between an open door and a window, with her right side towards the window. She suffers from rheumatism in her hands, feet, and shoulders. Fifteen years ago she had a slight attack of rheumatic fever. Heart is normal. Right eye : pupil was sluggish to light ; there was faint neuritis ; vision was $\frac{6}{60}$ $\bar{c}$ + 3 D. = $\frac{6}{12}$ and J. 1. The field was extremely contracted all round ; there was no scotoma (Fig. 35). Left eye was normal. V. $\frac{6}{12}$ $\bar{c}$ + 3 D. = $\frac{6}{9}$ and J. 1. Pot. iodide gr. x, t. d. s., was ordered ; also a blister daily to the right temple.

July 23rd.—Right eye : neuritis more marked. Urine examined and found to be normal. Iodide increased to gr. xx.

August 4th.—Right eye : $\frac{6}{12}$ $\bar{c}$ + 3 D. = $\frac{6}{12}$ and J. 1 ; neuritis less marked ; lower half of disc nearly normal, exudation covering fine vessels of upper half. Field contracted below.

September 25th.—Right eye : disc pale, especially its upper half. Field remains contracted below (Fig. 36).

Fig. 35.

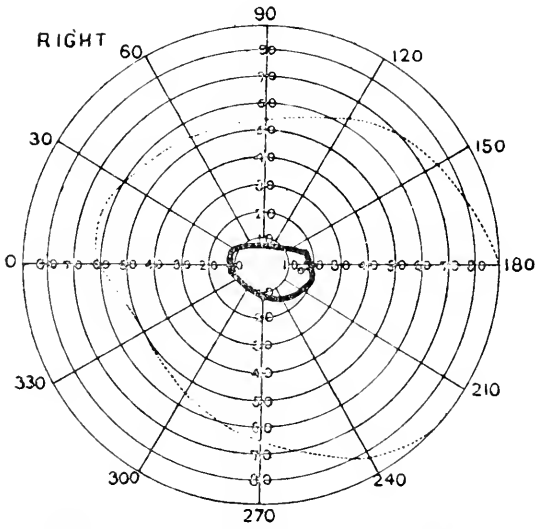

Miss L—, July 21st, 1896. Field for white.

Fig. 36.

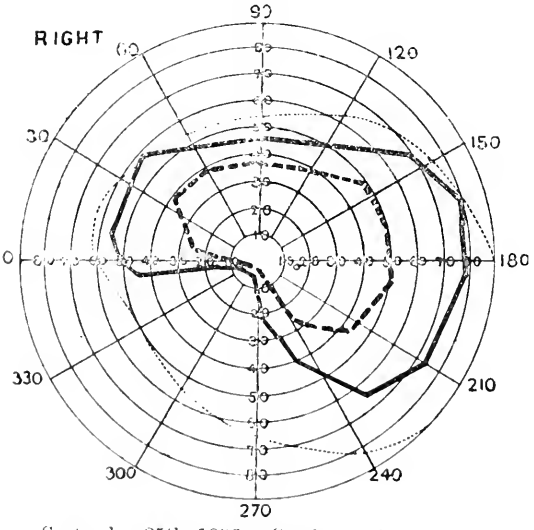

Miss L—, September 25th, 1896. Continuous line = field for white.
Dotted line = field for red.

Right pupil not quite so active as left. Vision: R. $\frac{6}{9}$ $\bar{c}$ + 3 D. = $\frac{6}{9}$ and J. 1; L. $\frac{6}{9}$ $\bar{c}$ + 3 D. = $\frac{6}{9}$ and J. 1.

This case is peculiar in that the inflammation attacked the peripheral fibres and the central fibres escaped.

Case 5.—Mr. M—, æt. 39, sent to me by Dr. Quayle, of Urmston, to whom I am indebted for the history.

In May, 1896, Mr. M— had a severe attack of ptomaine poisoning. The urine at that time contained a large quantity of lithates and albumen, and often blood. After recovery there were symptoms of peripheral neuritis, especially as regards the legs and feet. Towards the end of September the patient caught a severe cold, and had follicular tonsillitis. This was followed by marked anorexia, and attacks of great cold and shivering at a certain time each day, or on alternate days. He was very depressed, and there was a tendency to suicide.

In the beginning of November Mr. M— had pain in the right temple, up the forehead, under the right eye, and behind the right ear. On November 6th he had great pain at the back of the right eye, and next day the sight of this eye had almost gone. On November 11th there was pain at the back of the left eye, and the sight of this eye began to fail.

On November 12th I first saw Mr. M—. There was then pain at the back of the right orbit, and pain on moving this eye extremely upwards, inwards, or outwards, but no pain on pressing the eye backwards. The right pupil had been dilated with atropine; the fundus was normal, or perhaps there was the slightest softening of the margin of the disc: vision was counting fingers at upper part of field.

In the left eye the pupil was active; vision $\frac{6}{12}$ and J. 1 *vix.*; fundus normal; white field was contracted below, the red field contracted all round; there was no scotoma; colour perception was good.

Pot. iodide gr. x, t. d. s. was ordered, and a blister to be applied to each temple daily.

November 16th.—The right eye was in the same

FIG. 37.

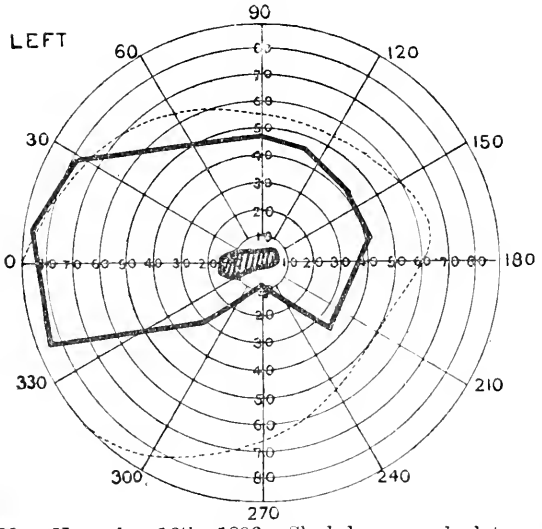

Mr. M—, November 16th, 1896. Shaded area = absolute scotoma.

FIG. 38.

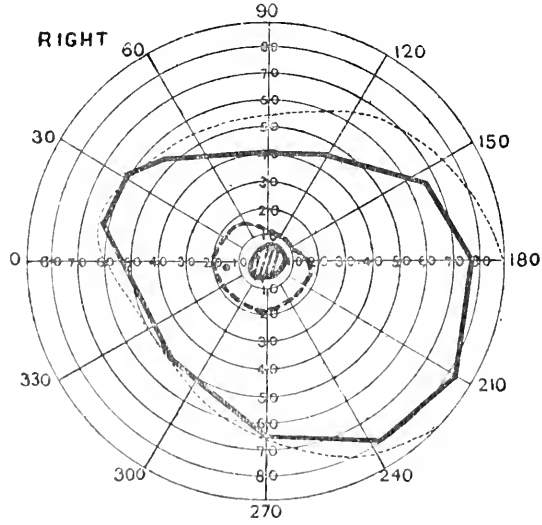

Mr. M—, November 25th, 1896. Dotted line = field for red.
Shaded area = absolute scotoma.

condition as above. The vision in the left eye had fallen to J. 16, and the field showed an absolute central scotoma (Fig. 37). The iodide was increased to gr. xx, t. d. s.

25th.—The vision of both eyes had improved, the right being now J. 16, the left $\frac{6}{6}$ and J. 1. The field of the right eye was only slightly contracted, but there was an absolute central scotoma (Fig. 38). The field of the left eye was normal.

28th.—Right eye vision $\frac{6}{9}$ and J. 1, that of the left eye $\frac{6}{6}$ and J. 1. Both fields are normal, the scotoma having disappeared.

December 21st.—Vision as on November 28th, but patient says there is still a little mist before the sight. The urine had been examined and found to be normal.

March, 1897.—The discs are slightly pale, but there is not that marked pallor that usually follows retro-ocular neuritis.

Case 6.—Elijah S—, æt. 17, was admitted into the Manchester Royal Eye Hospital on November 24th, 1896. The right eye had begun to fail three months before his admission to the hospital, and the left eye two months. In three weeks after the left eye began to fail the patient, who was a joiner, could not see to read, and had to give up his work. His health had always been good; there was no history of rheumatism, and the family history was good. The surface of both optic discs was slightly woolly, the fine vessels not being distinctly seen. The right disc was slightly paler than the left. The pupils had been dilated with atropine. The vision in both eyes was fingers at 3′. There was a large central blank in both fields. The treatment was pot. iodide gr. xv three times a day, and a blister daily to each temple.

On November 26th the vision had slightly improved, being J. 20 in both eyes. The fields, taken with the perimeter, showed that of the right eye to be a little contracted, and there was a large central absolute scotoma in both fields. The fixation was not central, so the scotoma in the chart is not quite central.

In the right eye large pieces of red and blue were recognised, but not green. In the left eye large pieces of red, green, and blue were recognised.

The blisters were continued for some weeks, the iodide was increased to gr. xx ter die, and hypodermics of strychnine were given twice a day. In December hypodermics of pilocarpine were tried, but by January 4th the vision was only R. J. 20, L. J. 18. The discs became pale, more especially that of the right eye.

No doubt this case came under treatment too late, for atrophy had set in when the patient presented himself at the hospital.

Mr. Gunn, in reply, said that the Society could congratulate itself on the valuable information which had been forthcoming from its members during this discussion. The clinical material to which he was most indebted when drawing up his paper in opening the discussion was the 'Transactions' of their own body; he thought that its utility in this respect was also a subject justifying congratulation.

Regarding Dr. Buzzard's remarks as to the *pallor* of the optic disc in retro-ocular cases, of course that gentleman spoke principally of the pallor in much more marked cases than many of those with which they, as ophthalmic surgeons, were familiar. He understood him to say that it was due to degeneration of the nerve-fibres. It was difficult to reconcile this view with the amount of recovery of vision. There was so little defect of vision usually left in these slight cases, often merely a slight scotoma for green or red, that he could hardly imagine it to correspond with as much optic nerve atrophy as would be accounted for by the large area of pallor; he therefore thought the pallor was due to changes in the fibrous tissue, very likely an overgrowth in association with toxic or inflammatory processes, or perhaps, in the very mildest cases, to a hyperplasia associated with the obstruction of the lymphatic circulation in the optic nerve.

He felt sure they were all pleased that Sir W. R. Gowers had been able to come and make any remarks in the course of the discussion, and they were glad to have the benefit of his opinion. That gentleman rather brought him to task for not having mentioned the composite nature of each axis-cylinder. The fact was he (Mr. Gunn) thought that he had sufficiently complicated the subject, and he really did not see what this point had to do with the causation or curability of the affection under notice. As to whether any disease of the central nervous system existed in these cases, and if it did, whether or not it was insular sclerosis, were questions he must leave neurologists to settle amongst themselves. There was no doubt that in a large number of cases, in which he was told there was insular sclerosis, there was evidence of optic nerve changes. Again, in a considerable number of patients who came with retro-ocular neuritis, there was temporary loss of power in the limbs, which, he understood Dr. Buzzard to say, was insular sclerosis in an early stage.

As to Mr. Berry's remarks, he did not know what that gentleman would have said if he (Mr. Gunn) had referred to the axis-cylinders being subdivided into their fibrils, because he said he was already overwhelmed with the complication of the subject as it had been introduced by the Council in its circular, and by himself in his opening remarks. That speaker said he did not believe in one-sided toxic amblyopia. Neither did he (Mr. Gunn) in the usual meaning of the word "toxic," but it had been suggested that the long interval which occasionally occurred between the affection of the two eyes might be evidence of some such possibility, and he wished to learn the opinion of others upon this matter. If they were to include the actions of ptomaines, and of such affections as gout and rheumatism, they might talk of a one-sided toxic effect. Take, for instance, œdema of the eyelids on one side, associated with headache, as in cases referred to by Dr. Ormerod in a communication to this Society. Such

cases were probably associated with errors of digestion. It was possible to get localised œdema in other localities from similar causes, and one optic nerve might possibly be involved. Of course, no one believed that an ordinary toxic influence of a chronic character was other than bilateral. Mr. Berry laid stress on the difficulty of appreciating uniocular pallor of the optic disc, and said that unless two observers concurred in the diagnosis it must remain doubtful. He was astonished to hear such a statement, because the amount of pallor usually observed was sufficiently distinct for the observer to be absolutely certain of its existence without having a second opinion. Personally, he was sure that if Mr. Berry made an observation of the kind, he (Mr. Gunn) would believe it without wishing to look at the case himself.

The subjective symptoms the same speaker also thought obscure, but he admitted that he perhaps had not paid sufficient attention to the information to be obtained from the pupil reaction. It was to be hoped that he would pay more attention to this feature, for he would certainly find it of great value. The same speaker did not believe in affection of the teeth being responsible for retro-ocular neuritis, though he admitted that there was a history of such a condition in some of his cases. He (Mr. Gunn) thought that it was generally believed that dental periostitis might travel to the orbit, and such a history was not uncommon in these cases. They all knew how severe a dental periostitis was sometimes, and they could well understand that it might occasionally extend through the spheno-maxillary fissure to the orbit. As to retinitis simulating retro-ocular neuritis, he mentioned this possibility in his introductory paper, but did not read the passage, as he had to omit some portions on account of the shortness of time allowed. He, however, was not aware that such cases were associated with migraine, as Mr. Berry had said. The latter affection, he thought, was always of central origin.

Mr. Hill Griffith was in favour of the view that the seat

of inflammation was just around the optic nerve entrance. If this position was universal, it was surely surprising how often they were unable to find ophthalmoscopic changes ; this speaker led one to think that its occurrence in this locality was one of the main reasons for the optico-macular fibres being involved.

Dr. Little's remarks were of much interest, and he felt sure that all appreciated them. That gentleman seemed to exactly understand the nature of the cases which it was particularly desired to collect, and it was gratifying that he was to give the Society a report of those he had mentioned.

Regarding the present evening's discussion, he had not included, as Mr. Jessop did, any cases of injuries of the optic nerve. Those cases he (Mr. Gunn) would put in another group.

He anticipated that Mr. Silcock would not like the use of the expression that some cases were produced by *cold* or *chill*, and he thanked that gentleman for giving the Society his views on the subject. He was also pleased to hear from Mr. Silcock a possible explanation of the central scotoma of retro-ocular neuritis. Other causes occurred to him (Mr. Gunn) which he had mentioned, and he thought the explanation from lymphatic circulation was more plausible, and rested on equally certain anatomical grounds.

He did not think that Mr. Silcock was justified in saying there was no such thing as physiological degeneration of nerve. He (Mr. Gunn) understood that there was a temporary degeneration always associated with action, succeeded by physiological regeneration ; this was what he meant by temporary physiological degeneration of the axis-cylinders.

He was very much interested in hearing the cases which Mr. Spicer had narrated, which corresponded very closely with the group mentioned some years ago by Lawford, where cases more or less toxic in apparent character did not improve on giving up the toxic agent.

Perhaps there was an inclination to run the tobacco theory too far. There were so many tobacco smokers, and it was so easy to get a history of even excessive use of it, that there was a risk of falling into the fallacy of saying that all toxic cases in smokers were cases due to tobacco. One was bound to investigate the other possibilities of toxæmia, and also inherited predisposition, *i. e.* as to whether they were family cases. Again, from what had been said about the peculiar and undetermined character of insular sclerosis, there was here a wide opening for the accommodation of doubtful toxic cases.

He thought that the case shown by Dr. Russell this evening was one of extreme interest. He was not sure whether there was any such case on record. No doubt the Society would be glad to make some further use of the pathological specimens, and perhaps view them along with other preparations bearing upon the subject which other members might bring forward, either now or in some months' time. He thought the specimens of the optic nerves in insular sclerosis should be referred to a committee, of which Dr. Russell ought certainly to be one, and he would suggest that Mr. Lawford and Mr. Edmunds should also belong to this committee.

Dr. Macnaughton Jones seemed to think that they were inclined to view hysteria and retro-ocular neuritis in the light of cause and effect. This was not his view at all, neither was it Dr. Buzzard's. There were a number of individuals who had symptoms of hysteria, and they might have symptoms of hysterical amblyopia. These cases might, and indeed sometimes did, have very decided nerve lesions afterwards, either in the optic nerves themselves, or in the spinal cord, or in the brain. Dr. Buzzard would speak of those cases, and it was to him that he (Mr. Gunn) was mainly indebted for his knowledge of them.

Mr. Frost had brought forward some interesting observations, and he thought it would be a good thing if members who had not taken part in the discussion would

bring up or relate cases which could be taken with those of the members who had spoken. The records of the Society collected in this way on former occasions had been of great value. He thought cases should be sent in and edited in the usual way, without reference to any committee.

He was astonished to hear how many cases of temporary complete loss of perception of light Mr. Frost had met with due to retro-ocular neuritis. He (Mr. Gunn) thought that such cases were by no means common, though he recognised that Mr. Frost had had a wide clinical experience, and possibly, in this particular, an exceptional one.

The photographic charts which Mr. Doyne had brought forward were of very great interest, and he believed that they were absolutely original. They had been very much in want of some means of registering pupillary experience. Men often examined the pupil reflex so rapidly in hospitals that they were very apt to take the reflex in the first part only. He did not know whether the records could be taken in a less expensive way.

It would be an impertinence for him (Mr. Gunn) to refer critically to the cases narrated by the President, but he would like to say that the Society was much indebted to him for the masterly way in which he had tabulated them.

Dr. Buzzard, in reply, said he should like to correct a misapprehension which was entertained as to his remarks on the pallor of the disc: his observation was, "It does *not*, therefore, appear likely that the disc pallor depends on degeneration of the nerve-fibres." Charcot had pointed out that secondary degeneration did not take place along the line of nerve-fibres involved in the islet of sclerosis, and therefore it was unlikely that, supposing an islet of sclerosis was present in the optic nerve, the pallor of the disc could depend upon secondary degeneration of the nerve-fibres involved.

He felt that the President had reflected the general feeling when he referred to the fact that there must be several different conditions which had been spoken of by different members.

As regards the lesion in insular sclerosis, there was no doubt it was a very peculiar one. A focus of very varying size might occur on one or both optic nerves. It might conceivably be of the size of a pin-head, or it might be as large as in the case Dr. Russell was kind enough to make sections of. So that the symptoms must necessarily be very varying, and they must contrast materially with those observed in other cases of retro-ocular neuritis.

He regretted that he was unable to agree with the view taken by Dr. Gowers. Contrasting the symptoms found in insular sclerosis with those in the optic atrophy of tabes, he (Dr. Buzzard) found in the first place that actual blindness was rarely produced in insular sclerosis. He granted that there was a certain amount of fallacy possible there. These cases lingered on for many years, and observation of them could rarely be retained until they came to an end. The degree of loss of sight might, therefore, be greater in some cases than he supposed it to be; but it was noteworthy that, with the exception of the case of which he had brought specimens, he could not call to mind, in the large number of cases of insular sclerosis which had fallen under his observation, another example in which the sight was practically destroyed. They knew how different it was in tabes. Then the temporary amblyopia which occurred in insular sclerosis was very characteristic. He need not dwell upon central scotoma. Uhthoff had found it in fifteen out of twenty-four cases of insular sclerosis. It was generally understood, he thought, that central scotoma was rare in the atrophy of tabes. The redness of the disc mentioned as having been seen by him (Dr. Buzzard) in some cases of insular sclerosis was remarkable; it was not a condition of "choked disc," but a dark red-grey disc with very little swelling. That appearance he had seen along with normal acuteness of vision. The

redness of the disc could hardly represent an irritative condition consequent on parenchymatous degeneration of nerve-fibres, or surely the sight would be enormously impaired. The fact mentioned by Dr. Russell regarding the specimen on the table, of the normal tissue intervening between the destroyed portions of optic nerve, was another instance of something not found in primary atrophy.

He did not pretend to hold a brief to prove that the alteration of vision in insular sclerosis was invariably dependent on retro-ocular neuritis. Considering the extreme irregularity which characterised the position of the islets of sclerosis, it seemed very unlikely that in 50 per cent. of cases of insular sclerosis the optic nerves should be singled out for the lesion.

As he had mentioned in his paper, there was a certain amount of diversity of opinion among observers as to the pathology of insular sclerosis, whether the islet represented a primary interstitial inflammation or was secondary to primary parenchymatous degeneration. And so, as regards the optic nerve, he thought it very possible that there was more than one condition at work, although the clinical evidence appeared to show that in the majority of cases there was a form of retro-ocular neuritis. In some, he thought, there might be primary parenchymatous degeneration of fibres of the optic nerve, the analogue of the parenchymatous degeneration of nerve-fibres in other parts of the central nervous system to which he had referred as having been recorded by some observers.

The case related by Mr. Jessop might possibly be explained in the same way as he had just mentioned. Referring to the case which Mr. Spicer had related (that of a man aged thirty-eight), he thought that if it could have been followed out it might possibly have been found to develop typical symptoms of insular sclerosis.

He should like to take that opportunity of thanking Dr. Russell for the trouble he had taken in the preparation of the sections, which he was sure the Society very much appreciated.

He was struck by the number of cases that Mr. Frost had met with in which there was no perception of light. This contrasted very much with his own experience of cases of insular sclerosis. He was unable to explain the difference.

With reference to what more than one speaker had mentioned in regard to cases of apparent retro-ocular neuritis which had come before them, and which had recovered, he again drew attention to the fact that in insular sclerosis one of the most characteristic symptoms of the disease was the occurrence of paresis of a limb, which lasted for a time and then recovered, the patient going on, as he had related in several cases, for years, perhaps, without anything wrong. Another limb might then fall into the same state, and little by little typical insular sclerosis would result. A similar history might occur as regarded sight. He ventured to remind his ophthalmological friends that the recovery which they mentioned might be only temporary, and that if the case were one of insular sclerosis recurrence might take place years afterwards.

In reply to Dr. Macnaughton Jones, he thought that gentleman misunderstood his point about hysteria. What he (Dr. Buzzard) mentioned was the very interesting fact that there was no disease so often mistaken for hysteria as insular sclerosis in its early stages. As ill luck would have it, they found that by investigation of the eye there was another trap for erroneous diagnosis. Figs. 14 and 15 were cases of insular sclerosis with no central scotoma but great concentric limitation of the field. Fig. 16 was a case of hysteria which recovered seven years ago, and which was not of the nature of insular sclerosis at all. The resemblance between these was striking. It was evident that there was a liability for the observer to be deceived. For instance, a girl said she could not use her arm; the fields of vision were taken and found to be contracted, and the observer said, "Here is a case of hysterical contraction of the visual field;" but this con-

traction might really be part of the symptoms of insular sclerosis.

Most of the points he would have touched upon had been answered so well by others that there was no need for him to detain them further, except to thank the meeting for the very kind and patient attention to that which, he feared, had been a very disjointed contribution to an extremely difficult subject.

VII. INTRA-OCULAR TUMOURS.

Sarcoma of choroid.

By W. H. H. Jessop.

May 6th, 1897.—Sophia E—, æt. 53, widow, since quite a child has had neuralgia in the right eye, but vision was good in it till four months ago, when on getting up one morning she found she could see little with the right eye. About this time she had a bad headache, lasting two or three days. Lately she has suffered much from headache. Has never had a blow in right eye, and has always been very healthy. Has had six children and one miscarriage. Father and mother died at advanced ages; one sister died of abdominal tumour (? cancer).

She is a healthy-looking woman, and has not lost flesh lately.

V. $\begin{cases} \text{R. } \frac{2}{60}. \\ \text{L. } \frac{6}{12}. \end{cases}$ The right field of vision is normal in the upper part, but wanting below.

Right eye: slight conjunctivitis, but nothing else to be seen externally; no enlarged episcleral vessels; cornea, anterior chamber, iris, pupil, and lens normal.

Ophthalmoscopically.—R. E.: immediately above the optic disc, and overlapping its upper half, is a greyish elevation with retinal vessels on it, seen clearly with + 10 D. Above this again is a much larger elevation, seen best with + 20 D., oval in shape, with a bilobed appearance above, and well-defined border. On this elevation are numerous hæmorrhages, but the largest ones are massed together in a vertical direction towards the middle

of the swelling. There are three small pigment patches, but the colour of the main mass is white, though the number of blood-vessels give it a pale pink shade.

June 18th.—The eyeball was excised; on cutting the optic nerve there was considerable hæmorrhage, and the posterior ciliary vessels were afterwards found much dilated.

On hardening the eye in formalin and making a coronal section, a solid greyish-white, non-pigmented growth was found starting from the choroid above the optic disc, and pushing the retina in front of it. The growth was lobulated, and had a broad base about 3 mm. high, 14 mm. vertical length, 11 mm. horizontal breadth. From this base a lobulated portion protruded forwards, its greatest height being 7 mm. It is this latter portion which is shown in the drawing, the only portion of the base seen by the ophthalmoscope being immediately above the optic disc.

Dr. Andrewes' report.—"The tumour is, in my opinion, a sarcoma, composed of rounded and irregular cells, only a few of which are spindle-shaped. Its most striking feature is the presence of numerous lacunæ, lined by flattened endothelium, rounded in shape and of varying size. These are apparently lymph spaces, and give it an almost cavernous structure. Pigment is scantily present, chiefly in the trabeculæ of ill-formed connective tissue intersecting the mass, but occasionally here and there in the tumour cells. There is scarcely enough pigment to warrant one in speaking of the growth as a melano-sarcoma, but the difference is one of degree only."

(*Card specimen. July 2nd*, 1897.)

VIII. PARASITIC DISEASES.

1. *Some cases of intra-ocular cysticercus, and one case of intra-ocular hydatid.*

By A. Hill Griffith, M.D.

(Plate III.)

Among British ophthalmologists, cysticercus within the eye is one of the rarest of ophthalmoscopic curiosities, and I should not be surprised if many of us have never seen a case.

There has only been one case recorded in these 'Transactions,' and that was by Mr. Hulke.

Through the kindness of my colleagues I have had opportunity given me of examining and making use of all the cases of this nature that have occurred in their practice, and am thus enabled to give a fairly complete account of our experience at Manchester. I am especially indebted to Mr. Roberts for the use of the specimens mounted by himself, from which figs. 1 and 3, Pl. III, were drawn by Dr. W. E. Fothergill.

Cases 1 and 2 were typical cases of cysticercus in the vitreous, under the care of Dr. Glascott and Dr. Little respectively, and have already been mentioned in a paper by myself in the 'Medical Chronicle,' April and May, 1892. "In each case one saw with the ophthalmoscope a large spherical bluish-white cyst, and springing from this the neck of the animal like an alabaster pillar, surmounted by the head and suckers, which, with its slow,

regular, and graceful movements, reminded one of an elephant's trunk, the whole appearance presenting a picture once seen, never to be forgotten."

It appears from our experience that, in the early stage, when the animal is living, there is no difficulty whatever in diagnosing the affection; but when it is dead, and effusion of lymph has taken place, great difficulty is experienced in arriving at a correct opinion.

In Dr. Glascott's case destructive inflammation took place later on, and the eye had to be removed. The cysticercus can be distinctly seen in the specimen, Pl. III, fig. 1. Towards the back of the eye is situated the cyst, with a papilla-shaped body, representing the retracted head and neck, protruding into it, the rest of the eye being filled up with concentrically arranged layers of lymph, which, as we shall see, is characteristic of the affection in the later stages. There is some blood about the ciliary region.

In Dr. Little's case that gentleman most successfully removed the cyst through an incision in the sclerotic. I did not see the operation done, but understand that it was very quickly and satisfactorily accomplished.

Case 3.—I happened to be in the operation room one morning when Dr. Little was about to remove an eye for supposed choroidal sarcoma, but before doing so he kindly asked me to have a look at the case. The patient was a delicate-looking lad of 17, whose right eye had been failing for two years. There was no perception of light. The eye was decidedly soft, but free from injection. The cornea and lens were quite transparent, and one could make out even on simple inspection by daylight a total detachment of the retina, which approximated but did not quite reach the back of the lens, clear vitreous intervening.

Although there could be no doubt as to the condition being one of detached retina, the characteristic sulci and vessels being clearly seen, still it was very peculiar

and unusual from the total lack of mobility, the dense white colour, and the complete absence of translucency at any part; there was obviously something solid behind it. I could not agree that it was a sarcoma, and laid stress on the age of the patient, the lowered state of the tension after so long a period as two years, and the lack of pigmentation in support of my contention. If I had contented myself with this negative opinion I should have been correct, but I ventured to suggest that it might be due to tuberculosis, and so fell into error.

An examination of the excised eye, which was kindly put at my disposal, shows it to be a beautiful example of subretinal cysticercus. In fig. 2, B, the retina seems to be totally detached, and the space behind it filled up with concentric layers of lymph, in the midst of which is seen the cavity in which was snugly embedded the cysticercus. This latter was easily removed, and, as depicted in fig. 2, A, shows that the neck is retracted and forms a nipple-shaped body, with its apex pointing inwards and a little black spot at its base. The lack of mobility in the detached retina is fully explained by the backing of lymph.

I shall, later on, briefly refer to the microscopic appearances of this case and Cases 5 and 6.

Case 4 was a young woman æt. 19, under the care of Dr. Little, and from the notes taken by Mr. Roberts it appears that the sight of the right eye had been failing for some eight months. Shortly before admission she could just count fingers, and the cysticercus could be dimly seen close behind the lens. When she first came to the hospital the vision was $\frac{6}{6}$, but unfortunately no ophthalmoscopic examination was made.

This patient volunteered the statement that for some time she had noticed small flat worms in her stools, and the use of an anthelmintic while she was in the hospital brought away a tapeworm.

Pl. III, fig. 3, shows the cysticercus close behind the lens, with its corrugated neck extended, looking like a

PLATE III

Dr. Hill Griffiths' paper on Intra-ocular Cysticercus.

FIG. 1.—Section of eyeball with cysticercus in the vitreous; head retracted.

FIG. 2, A and B.—Subretinal cysticercus.

FIG. 3.—Shows cysticercus in the vitreous; head and neck extended.

FIG. 1.

FIG. 2.

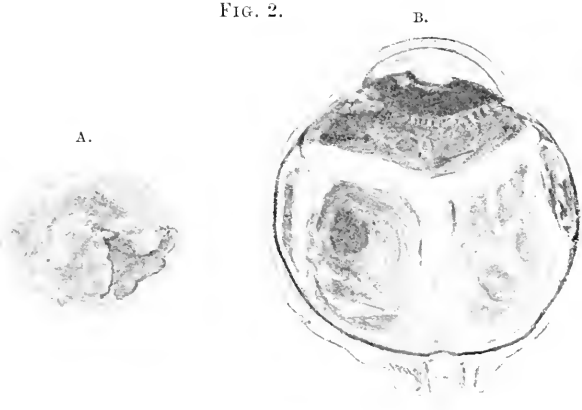

FIG. 3.

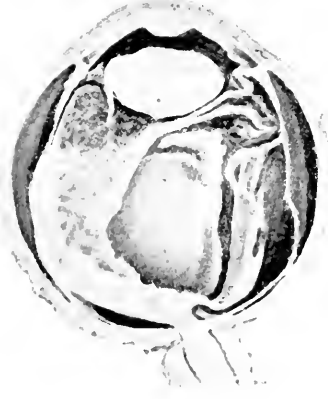

Adlard, imp. *Bale and Danielsson, lith.*

partially drawn-out concertina. The characteristic deposit of stratified lymph is already pretty marked.

I am indebted to Dr. Emrys Jones for Case 5, a woman of 36, who had suffered from repeated attacks of iritis in one eye, which was quite blind, soft, and injected. The anterior chamber was shallow. Detachment of the retina with a bluish mass of lymph in the vitreous could be made out. The excised eye was opened and examined by our then house surgeon, Dr. Charles Ramage, whose notes say that it contained a distinct cysticercus. I cannot, of course, personally vouch for it, but from the "nest-like" cavity in which presumably the cysticercus had lain, and which is well seen in the specimen I exhibit, I should think that there is little doubt as to its being a genuine case.

Case 6 was a woman æt. 31, under the care of Dr. Little for gradual failure of sight in the left eye, with a thick mass of lymph in the vitreous which slowly extended and destroyed the sight. The case was under observation a long time, and repeated examinations were made, but no one suspected its true nature. The eye was removed and examined by myself, and the naked-eye and microscopical preparations exhibited show all the characteristics of intra-ocular cysticercus, except that the parasite itself is wanting.

It is not unreasonable to suppose that, in old-standing cases like that above, the parts of the animal may become disorganised, and wholly or in part absorbed.

In Cases 3, 5, and 6, microscopic sections of the tissues around the cysticercus show the choroid thickened, hyperæmic, and closely packed with fine round cells; next comes a dense layer of fine fibrous tissue, and internal to this a fine network of threads of lymph, with numerous round cells in the interstices. A few giant-cells were seen in Case 3, and plates of bone in Case 6. In concluding the cases of cysticercus, I beg to submit—

(1) That cases of slow failure of vision without a puncture wound or foreign body in the eye, and with a distinct, bluish, rounded mass of lymph in the vitreous, are cases of cysticercus.

(2) That the disease is perhaps not so extremely rare in this country as the cases hitherto published would lead us to infer.

Excluding Case 6 we have five cases in about 180,000 eyes, or one in 36,000,—a proportion which is much exceeded in some parts of Germany; for instance, in Berlin, where I understand they see about one in 1000 eye cases.

The last case I shall mention is *not* a cysticercus, but an intra-ocular hydatid cyst—a condition which, as far as I know, has never been described.

Hydatid cysts in the orbit have been recorded in these 'Transactions,' and having made microscopical sections of the case presented by Dr. Mules, I feel convinced that the case I am going to describe is of this nature.

The patient was a healthy little girl 3 years and 8 months old, who was brought to the out-patient department under my care, for what looked, on a casual examination, like some form of posterior polar cataract in the right eye. The sight was gone, the eye was free from injection, and the tension was normal. A closer examination showed a dense, white, glistening, opaque, non-vascular opacity in contact with the back of the clear lens. It did not present a concave surface like a posterior polar cataract, but was quite flat. No free edge could be made out in any direction even on wide dilatation of the pupil with atropine, nor was there a trace of fundus reflex to be seen at any part. Although the iris was not advanced, the opacity looked distinctly nearer to the cornea than an opacity behind the lens ought to do.

When I saw the child in the hospital a few days later, after the use of atropine, glaucoma had taken place, the eye was injected and very painful, and the cornea slightly hazy.

Dr. Little was now asked to see the case, and said it

was undoubtedly a growth. I did not venture a contrary opinion, but on his advice enucleated the eye, and show naked-eye and microscopical preparations. The interior of the eye is lined by a dense continuous membrane, closely adherent to the lens, ciliary body, and retina, and occupying accurately the position of the hyaloid membrane. The lens is diminished in thickness at the expense of the posterior half, the posterior surface being almost quite flat,—a state of affairs which satisfactorily accounts for the undue proximity of the opacity to the cornea noted before excision. Microscopic sections of the entire globe in the horizontal plane show the choroid, retina, and other parts practically normal. The cyst wall is composed of numerous superimposed structureless lamellæ. Some of the most internal of these have in places become detached at the end, and curve inwards like a watch-spring, or the shavings of wood from a carpenter's plane.

(*November 12th,* 1896.)

The PRESIDENT said the Society was very much indebted to Dr. Hill Griffith for his valuable paper. He believed few of those present had seen cysticercus within the eye. It would be interesting to know whether the relative frequency of the disease in Manchester was due to the cases having been overlooked in other parts of our country, or to conditions of life peculiar to certain districts. He referred to Professor Zehender's statement in the Bowman Lecture for 1887, to the effect that intra-ocular cysticercus on the continent of Europe was much more common in some countries or states than in others.

Mr. LAWFORD asked if Dr. Hill Griffith could say whether the cysticercus was that of *Tinea soleum,* or of the *Tinea medio-canellata ;* the latter was said by some authorities to be the more common cestode in this country.

Mr. HARTRIDGE asked whether the cases mentioned were English subjects or Germans, and whether he had any knowledge of the food they had eaten.

Dr. HILL GRIFFITH said he was very sorry he could

not give satisfactory information about the habits of the patients he had referred to. They were all English people. He could not say whether any of them were great pork eaters. He believed it was the *Tinea soleum* which was found in all the cases.

Report of the Committee appointed to examine Dr. Hill Griffith's specimen of Intra-ocular Hydatid Cyst.

We have examined Dr. Hill Griffith's specimen submitted to us by the Ophthalmological Society. We find the lens displaced forwards and presenting a marked concavity on its posterior surface. Immediately behind the lens are the remains of the vitreous humour, which is exceedingly shrunken, detached from the retina, and surrounded by a much wrinkled hyaloid membrane. Occupying the space left between the hyaloid and retina is a large cyst, the wall of which is composed of hyaline substance showing marked lamination throughout its whole extent. We have compared sections of the wall of the cyst with those of an undoubted hydatid (*Tænia echinococcus*), and find that the two specimens are almost identical in appearance.

In the specimen submitted to us for examination we find no trace of endocyst, hooklets, or other contents. The tunics of the eye are *in situ*, and, except for some scattered patches of apparent choroidal atrophy, present no visible abnormality. The presence of this laminated membrane behind the hyaloid, its great resemblance to the ectocyst of true hydatid, and its dissimilarity to thickened hyaloid, or any normal or pathological structure, other than hydatid, with which we are familiar, lead us to infer that, in spite of the absence of more positive evidence, the specimen is one of intra-ocular hydatid cyst.

(*Signed*) E. Treacher Collins.
John Griffith.
Norman M. MacLehose.

January 21*st*, 1897.

2. *Note on the further history of the case of filaria loa previously reported to the Society.*

By D. Argyll Robertson.

My patient, Miss H—, affected with filaria loa, whose case was brought under the notice of this Society at the meetings in October, 1894, and March, 1895,* having improved greatly in general health, returned to Old Calabar about a month after my last report.

Before leaving this country she had remained free from the sensations due to movements of the parasite, but scarcely had she returned to the tropics when her symptoms recurred. In a letter written in January, 1896, she mentions that she had frequently experienced itching behind her eyes, but that no worm had made its appearance in front. The swellings in the arms had recurred at intervals, and a medical man in attendance thought that they indicated beri-beri. She further stated that she had had a conversation with Miss Kingsley, the lady explorer, who informed her that nearly every one on the Ogowe River near Gaboon suffered from these worms. My patient also, as requested, sent specimens of mosquitoes and sand-flies, which were subjected to microscopic examination by Dr. Manson and myself. We failed to detect in their interior anything that could be viewed as embryo filariæ.

I did not hear again from her till July last year, when she wrote informing me that one night on going to bed she felt a little nip in the side like a mosquito bite, but upon looking found a worm wriggling about under the skin. Fortunately one of the missionaries, who had received a little medical training, was at hand, and managed with knife and forceps to extract it. She put the worm into preservative solution in a bottle, and sent it to me for examination. She also mentioned that she had for

* 'Transactions,' vol. xv.

some weeks previously been troubled with a worm occasionally appearing under the conjunctiva. Since then she had on two occasions had incisions made on the knuckles for a worm that seemed to wander down her arm and suddenly appear at the wrist or back of the hand. She stated that insects do not bite her often, that mosquitoes are few where she was staying, and that she did not think she had suffered from a sand-fly bite since she came out.

Miss H— did not stand the climate of Calabar well, and became again affected with severe colitis and dysentery, so that she had to be sent home about the middle of January, arriving in this country in the beginning of March in a very feeble, exsanguine state. She is residing in the neighbourhood of Edinburgh, and I have seen her twice since her return, the last time being on the 3rd of June, when I found her much improved in her general health, the dysentery having almost entirely ceased. She explained to me that the worm removed from her at Calabar had been extracted from the abdominal wall in the left lumbar region. She also stated that she always has nausea and headache at the times the worms are troubling her, and that occasional swellings in the arms such as she has are not uncommon among natives of or residents in Old Calabar, and that all of those thus affected whom she questioned were troubled with worms.

She has recently had visits of the worm to the lids of both eyes, to the side of the nose, the crown of the head, the left shoulder, and under the skin of both hands, especially over the knuckle of the middle finger of the left hand, but the worm's visits were of very short duration.

On the 15th of last month the parasite reappeared in the abdominal wall, on this occasion close to the umbilicus. Attempts were made by a doctor in her immediate neighbourhood to secure the worm, but they failed, the parasite disappearing before suitable forceps could be got to seize it.

At the suggestion of Dr. Manson I asked Dr. Thin, under whom the patient had placed herself for general treatment, to undertake the microscopic examination of her blood drawn at various periods of day and night, of the urine, saliva, fæces, &c., to determine whether any embryo filariæ were present. This investigation he kindly undertook, and has sent me the following report:

"I have examined blood-smears drawn from Miss H—'s finger at 4, 5, 6, 7, and 12 o'clock a.m., and 1, 3, 4, 7, 10, 11, and 12 p.m., but can find no trace whatever of the embryos of the *Filaria loa*. I have also examined microscopically the fæces and mucus associated with the dysenteric condition from which she suffers, but have not seen anything to throw light on the development of the filaria. The urine, saliva, and nasal mucus have also been examined, but with a negative result.

"(*Signed*) Robert Thin.

"*June 2nd*, 1897."

The preparation sent to me as the parasite removed from Miss H—'s side was on examination found to consist of the uterine tubes and appendages and alimentary canal of a filaria. The uterine tubes were stuffed with ova and embryos. Unfortunately there was not a fragment of the wall or integument of the worm to be found, which renders the diagnosis of the variety of filaria somewhat incomplete; but as the patient was one affected with filaria loa, and the embryo filariæ presented exactly similar characters to those in a specimen of undoubted filaria loa, we can scarcely avoid the conclusion that this parasite was of that nature, and, judging by the extent of the viscera, it must have been a large-sized worm. I handed the specimen over to Dr. Manson for examination, and he reports, "The fragment you sent me was part of the uterus of a minute nematode, and judging by its size would answer very well to the uterus of *Filaria loa*. It was crowded with embryos, some of which had escaped, and could be seen distinctly although distorted and shrivelled some-

what by the preserving medium. They were shaped exactly like *Filaria nocturna*. One important feature I was able to make out, namely, the embryo was enclosed in a sheath. I can say no more of any value on the subject; my belief is that the fragment belonged to *Filaria loa*."

Admitting that this specimen is from a *Filaria loa*, the conclusion is obvious that that parasite is one that does not confine its visits to the neighbourhood of the eye or eyelids, but may occur under the skin of any part of the body, probably attracting attention only when it appears at a part where the skin is thin and sensitive, as in the eyelids, or when it presents itself under the delicate thin conjunctiva. It would be interesting to investigate how the worm travels—whether it forms burrows or channels in the cellular tissue, along which it may glide rapidly and easily (indications of which I imagine I observed when removing the parasite from my patient's eyelid), or whether it can penetrate the meshes of the cellular tissue readily in any direction. I think there can be little doubt that, as was suggested by Dr. Manson, the bosses on the surface of the integument facilitate the movements of the parasite.

It is, perhaps, worth noting that whereas my patient was, while in this cool climate, free for months from indications of the presence of the worms, no sooner does she return to the tropics than the parasites are restored to life and activity.

Since my last communications to the Society two additional specimens of the *Filaria loa* have been described, one by Professor Hirschberg, of Berlin,* and one by Professors Ludwig and Saemisch, of Bonn.†

Professor Hirschberg's specimen had been removed by a German merchant from the eye of a negro in the French Congo country. The parasite was preserved in

* 'Berl. klin. Wochenschr.,' 1895, No. 44.

† 'Zeitschr. für wissensch. Zool.,' Bd. lx, Heft 4.

spirit and sent to the Berlin Museum, and was exhibited by Dr. Hirschberg at a meeting of the Berlin Medical Society in October, 1895.

The other specimen was removed by Professor Saemisch in August, 1895, from the conjunctiva of a Russian naval officer who had made many voyages to the West Coast of Africa, and had lived for considerable periods in different parts of the country. His last visit to West Africa was in 1891, but he had also travelled in Egypt in 1892–3.

The worm was female, measured 41 mm. in length and 0·5 mm. in thickness, and had the integument ruptured in the process of extraction. It was subjected to careful examination by Professor Ludwig, who gives a minute report of its characters, which corresponded very closely to those of the female parasite removed from my patient as described by Dr. Manson.

Dr. Manson has also authorised me to mention that he has at present a case of filaria loa under his care in whom the worm never appears in the eye, but every few months visits the forehead, bridge of nose, &c. He, like my patient, is affected with fugitive puffy swellings in the arms. Dr. Manson has carefully examined the blood and the urine in this case, but has failed to detect embryos.

There can now be little question that the parasite is much more common than was previously believed, at any rate in the Congo region, and it is to be hoped that some of our professional brethren resident in West Africa may soon by careful investigation discover the intermediate host, if such there be, and the precise course of propagation and development of this worm.

(*June* 10*th*, 1897.)

The President asked whether there was anything to show how many worms one individual might harbour.

Dr. Argyll Robertson replied that it was unknown whether one worm constantly changed its position and appeared at different parts of the body, or whether there were several worms. Dr. Manson thought there were a

large number of worms in the body, and that sometimes one and sometimes another came to the surface.

Further note, September 6th, 1897.

At the end of last month I obtained another specimen of *Filaria loa.* It appeared that my patient about the middle of August observed a worm under the skin of her right breast and got her sister, who is studying medicine, to undertake its extraction. This was successfully effected by seizing it with forceps and cutting down upon it. Miss H— further informs me that within ten minutes after the operation she felt a bite in her left breast, and on looking found another worm there. Her sister attempted to get it also, but the forceps slipped and the filaria escaped. Unsuccessful attempts had also been made to remove worms from her right wrist and the knuckle of her left hand, and she had felt the parasite lively on her left shoulder.

The filaria removed was a large-sized female one. I have sent it to Dr. Manson for careful examination.

IX. DISEASES OF THE ORBIT.

1. *A case of orbital cyst, probably a dacryops.*

By Arnold Lawson.

(Plate IV.)

The case first came under the care of Mr. Critchett, who called my father in consultation. Subsequently my father operated and removed the cyst, and then handed it to me to examine and report upon. The history is briefly as follows.

The patient was a young married lady æt. 19 years, and four months advanced in her first pregnancy. Four months before she came under the notice of Mr. Critchett or my father she noticed some drooping of the left upper lid, and this rather increased, so that it became difficult for her to open her eye. When seen first there was considerable ptosis, with almost complete obliteration of the oculo-palpebral fold, and with distinct fulness to the touch across the superior portion of the lid. There was slight proptosis of the globe downward and forward, with some limitation of movement upward. On raising the upper lid with the finger a soft elastic swelling slipped forward between the lid and the globe. The swelling had a distinctly dark bluish appearance, and at once gave the impression of being cystic, its dark colour suggesting that it might be a cystic degeneration of a venous nævus.

The tumour was not adherent to the skin, and there was no glandular enlargement and no pain. The tumour was said to be increasing rapidly in size, but the general health remained unimpaired.

The patient was next seen a month later. The tumour

had grown considerably in size, and was much paler in colour. There could be no doubt at all of its cystic nature. The lid was now so much pressed down by the tumour that the patient was completely unable to open her eye. If the upper lid was drawn up the tumour instantly bulged forwards from behind, but only its anterior surface could be seen. The general health continued excellent.

A few days later the growth was removed by dividing the external canthus, and by this means having everted the lid the anterior surface of the growth was freely exposed. An incision was now made through the conjunctiva at the fornix along the whole length of the tumour. Its anterior surface was found to be adherent by tags to the subconjunctival tissue; but as soon as these adhesions had been divided the remaining upper and posterior portions of the tumour were found to be entirely free except just at the upper and outer angle, where it seemed to be attached to the lacrymal gland. The periosteum was quite uninvolved. The tumour was now shelled out without any further trouble, and without any injury to the wall of the tumour, which was obviously a cyst. The conjunctival wound healed at once; but it was a full fortnight after the operation before the patient regained sufficient power to raise the upper lid sufficiently to expose the whole of the cornea. Recovery was perfect in every way. The excretion of tears was unimpaired, and some slight diplopia which was apparent on raising the lid before the operation, entirely disappeared.

The cyst on removal looked exactly like a pigeon's egg, both in shape, size, and colour, which was a dirty white when looking down on to it. If, however, it was held up to the light it looked of a pale yellow from the colour of its contents, and its walls were seen to be translucent and very thin.

Slide 1 (fig. 3, Plate IV).—This is a view of the posterior wall of the cyst; its walls smooth and free of

PLATE IV.

Mr. Arnold Lawson's paper on Orbital Cyst.

FIG. 1.—Network of fibrin fibrils with leucocytes in the meshes. (Stained by Weigert's method.)

FIG. 2.—Cells from the cyst wall.

FIG. 3.—Posterior surface of the cyst; natural size.

FIG. 4.—Anterior surface of the cyst; natural size

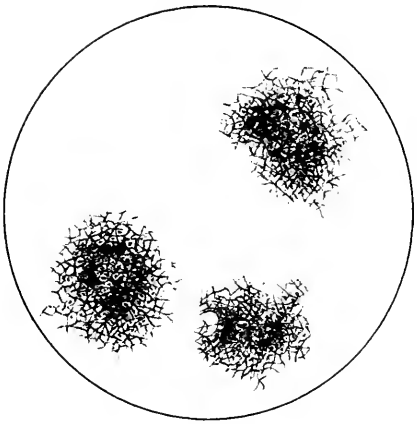

Fig. I

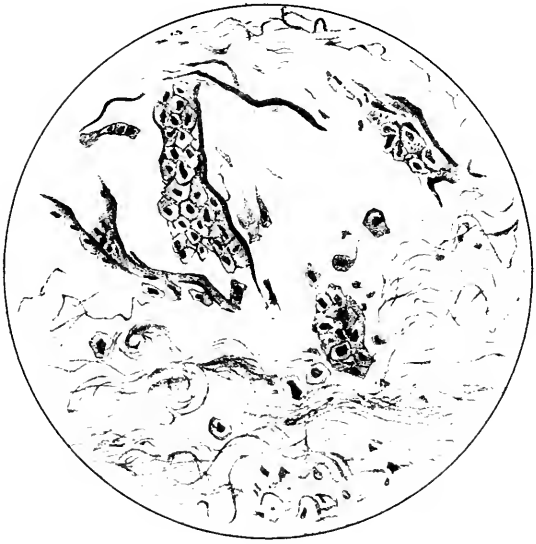

Fig. II

Fig. III

Mary H. Brooks, del.

Fig. IV

Bale & Danielsson, Lith.

any adhesions. This surface is more rounded than the anterior, and more like an egg. The thick end of the egg pointed downwards and inwards, and was the part that caused the bulging under the lid, whilst the narrow end looked up and outwards, and seemed to be attached to the lacrymal gland. The cyst measured 40 mm. in length, which is as nearly as possible 1½ inches, and 22 mm. at the broadest part of its base.

Slide 2 (fig. 4, Plate IV).—This is a view of the anterior surface of the cyst, and it is seen to be more flattened than the posterior surface, and the resemblance to an egg is consequently diminished. The surface where the cyst was adherent to the subconjunctival tissue is plainly shown, the median ridge corresponding to the line of the conjunctival reflection.

The flattening is no doubt due to the pressure of cyst against the eyeball. On opening, the cyst was found to be an unilocular sac with exceedingly delicate walls, and containing about two drachms of a limpid straw-coloured fluid with a slight sediment. The interior lining of the cyst, unlike the exterior, was rough and shaggy, and resembled in appearance a fine layer of cotton wool.

Slide 3.—Under the microscope the cyst wall presented a very curious appearance. In the first place the walls were so delicate that I could obtain no satisfactory sections by freezing, so I therefore embedded portions in celloidin. The wall is entirely composed of fine areolar tissue, very wavy and elastic in character, and staining very indifferently in hæmatoxylin. The only difference between the outer and inner linings is the density of the tissue, which becomes more and more loose and wavy as the interior is approached. The almost complete absence of the cellular element is a curious feature. I examined a good many specimens before I found any cells lining either the exterior or interior of the cyst wall. A few connective-tissue cells in the areolar tissue could be found, but epithelial cells seemed conspicuous by their absence.

Slide 4.—I, however, at last secured a specimen in which I found a few and very small cells scattered here and there along the innermost portion of the wall. The cells appear flattened and of a somewhat irregular shape, and are characterised by a very large nucleus and by their extreme smallness (fig. 2, Plate IV). I think they may be described as being small glandular cells. Another interesting point in the cyst wall is the presence here and there of what look like delicate tubes, either arterioles or possibly small ducts. They lie near the outer surface and apparently run along the length of the cyst, but I have not succeeded in obtaining any cross-section of one, and am unable to say whether or no they are ducts. Attached to the inner surface of the cyst and lying in the meshes of the very loose areolar tissue are seen a good many homogeneous-looking bodies (one of which can be seen in the present slide), and of which I shall have more to say in a moment.

Examination of the fluid of the cyst showed it to be neutral in reaction. It gave a free precipitate of albumen with nitric acid, and a small but distinct reaction to the nitrate of silver test for chlorides. It contained no sugar, and its specific gravity I could not determine on account of the small quantity of the fluid. This, however, was not high, as the fluid was very limpid in character.

Slide 5.— Microscopical examination revealed the presence of a large number of leucocytes and a fair number of red corpuscles. To the elements of blood the fluid owed its pale yellow colour, and probably most if not all the albumen. The chief feature of the fluid is the presence of large numbers of transparent homogeneous bodies, of great multiplicity of size and shape, the majority being more or less spherical. They have all well-defined edges, and stain readily with hæmatoxylin or Loeffler's blue. Each one presents a variable number of adherent leucocytes, and by carefully focussing it can be made out that leucocytes are actually embedded in their substance.

Every specimen of the fluid is full of these bodies and all present these characteristics, and, as I have just mentioned, similar bodies were found attached to the cyst wall. Leucocytes and red corpuscles lie in numbers free in the fluid besides those attached to the bodies. Nothing further could be found in many specimens of the fluid, but after having succeeded in demonstrating a few epithelial cells in the cyst wall I made further search in the fluid, and at last found a few clusters of minute cells with large nuclei corresponding exactly to those found in the cyst wall.

I must confess to have been very much puzzled at first by the appearance of these curious bodies in the cyst fluid, and until I succeeded in finding the cells in cyst wall and fluid I was completely at sea as to what the nature of the cyst could be. It was suggested that these bodies might be parasitic, *i. e.* that they might belong to an acephalocyst or cysticercus cellulosæ, but the structure of the cyst wall discounted the question of this being a parasitic cyst. It occurred to me from the constant presence of leucocytes, both adherent to and embedded in these bodies, that they might be detached masses of coagulated albumen. I consulted Dr. Sidney Martin on the question, and he thought that this was a probable explanation, and he advised the staining of the fluid for fibrin by Weigert's method.

Slide 6.—This I did with the result that I obtained well-marked evidence of fibrin. The bodies, instead of appearing homogeneous, are intercepted in every direction by a fine branching network which consists of fibrin fibrils, and caught in the meshes lie the leucocytes (fig. 1, Plate IV). In many cases the regular outline of the bodies is lost by the fibrils here and there stretching out beyond the main mass. Weigert's method of staining fibrin, I may say, is the same as Gram's method of staining tissues, with the exception that a preparation of two parts of aniline oil to one part of xylol is used to decolourise instead of alcohol, the specimen being finally

washed in xylol to get rid of the aniline-xylol before mounting in Canada balsam.

I think that there can be no doubt that these bodies are detached masses of coagulated albumen, but how to account for their presence? The phenomenon was entirely strange to me, and I could find no record of such bodies in cyst fluid in text-books or cases. On thinking the matter over one or two possible explanations have occurred to me. The most probable theory I can suggest is as follows :—In the first place I must mention that the cyst was preserved for about three weeks in a solution of weak spirit and water before examination, I being away on my holiday when it was removed. Undoubtedly some osmosis took place between the cyst contents and the alcoholic solution, and the fluid of the cyst would become impregnated with a weak solution of alcohol. Now the presence of blood-cells in the fluid with the pale straw-colour imparted to it was in all probability due to a very small hæmorrhage from the cyst wall, occurring either before operation, or more likely from some force applied during the process of enucleation. Now the coagulation of blood, as every one knows, is due to the presence of a fibrin-ferment derived from the leucocytes which unites to form fibrin with a substance known as fibrinogen, which originates from blood-plasma. The elements of coagulation were therefore existent in the cyst, owing to a small hæmorrhage. Coagulation is, however, retarded and even altogether prevented by sufficient dilution of the blood with water, and here of course dilution was extreme. Moreover sodium chloride delays coagulation, and in the cyst fluid there was present a small quantity of this salt. But, on the other hand, we have the presence of the alcohol to deal with. Alcohol possesses the power of precipitating albumen, and also will dissolve the fibrin-ferment out of the leucocytes. In fact, prolonged exposure to alcohol is a method of obtaining fibrin-ferment. Sodium chloride, too, tends to

dissolve out the fibrinogen from the blood-plasma. Now I think I have successfully demonstrated the presence of fibrin in these bodies, and I further venture to think that, having regard to all the varying influences at work, it is readily conceivable that the leucocytes settling down in an albuminous precipitate in the medium of a fluid charged with alcohol but largely diluted with water, there should come about partial and incomplete attempts at coagulation resulting in the production of a number of discrete and isolated coagulated points, such as are presented in the fluid of this cyst. This theory is supported not only by the presence of fibrin network in these bodies, but also by the constant presence of leucocytes attached to and embedded in them, to which I have already alluded.

This theory forces me to the belief these bodies may after all be the result of the immersion of the cyst in alcohol, and that they were not present in the cyst before removal.

But before leaving the subject I should like to draw attention to the possible analogy between these bodies and the hyaline casts met with in urine. Hyaline casts, according to Rovida, who is the best authority on this subject,* are probably derived from some proteid of the renal epithelium. They may be said, therefore, to consist of a precipitated and coagulated albumen. They are almost completely transparent, and seen with difficulty unless stained. The urine in which they are found is almost always albuminous. If such a condition may obtain in albuminous urine, how much more readily might it occur in an albuminous cyst impregnated with alcohol, which itself has the power of precipitating albumen!

The presence of these curious bodies in the cyst fluid does not therefore, I think, materially affect the diagnosis of the cyst, and the discovery of cells lining the inner wall and also present in the cystic fluid makes it certain that this is an epithelial cyst. Its situation, the

* Jakshs and Cagney, 'Clinical Diagnosis.'

glandular type of the cells, the presence of sodium chloride in the fluid, and the limpid character of the fluid itself, point to its being an example of a retention cyst of the lacrymal gland, otherwise known as "*dacryops.*" Whether the cyst is due to a dilatation of part of the gland itself, or to one of its ducts, I am unable to say. Personally I should incline to the latter view. The unequal size of the cyst at its two extremities, the larger end pointing to where would be the orifice of the duct, and the narrow end towards the gland itself, seems to me to favour the view of this being a retention cyst of a lacrymal duct. For it would be at the orifice of a duct that the pressure caused by a block would first be felt, and at that end dilatation would naturally, therefore, be greatest at the first. The cyst had only been known to exist about five months, and the expansion at the proximal end of the duct might not have had time to become so great as at the distal end. If a part of the gland itself were the seat of the cyst I should have expected a more uniform shape to the cyst. In either case one would expect the cells to be so metamorphosed by the pressure of the fluid as to make this point uncertain. I have only applied the term "glandular type" to the cells in a general sense. They are so irregular in shape and grouping that I could not definitely assign them any particular name. Probably the cyst has grown in connection with the lower division of the gland known as the inferior lacrymal gland, which lies close against the subconjunctival tissue of the lid, beneath the tendinous expansion of the levator palpebræ superioris.

Dacryops is a very rare affection, and but very few cases have been recorded. No good account is given in any of the text-books. Fuchs devotes one line and a half to its consideration, and some authors do not even mention it. The best article on the subject that I have been able to find is one by the late Mr. Hulke, in vol. i of the 'Royal Ophthalmic Hospital Reports,' and a few quotations from his article may not be out of place.

It will be noticed how well many of the points of his description fit this case.

"Dacryops is a small cystic tumour in the upper and outer part of the upper eyelid, unattached to skin, which glides freely over it. . . On eversion of the lid and pressure downwards and inwards a tense elastic fluctuating swelling instantly starts out between the globe and the lid. . . . The most characteristic and striking sign of dacryops is the sudden enlargement which the tumour undergoes when the patient weeps. . . . An attempt to extirpate such a tumour will generally fail on account of the extreme delicacy of its walls. . . . They are mostly the result of mismanaged abscess or of neglected wounds, but they are sometimes congenital. . . . Their formation has been explained in two ways; either by the uniform distension and dilatation of an excretory duct, or secondly by the distension and expansion of the interstices of the cellular tissue."

In this case no enlargement of the tumour was noticed when the patient wept. I do not think much importance can be attached to such a symptom, as the backward pressure on the secreting glands of the cyst, as soon as the cyst was moderately distended with fluid, would tend to stop all sudden increase in secretion such as takes place in the normal gland on weeping.

Altogether I have been able to collect only seven cases of dacryops, and in two of these no microscopical report is given of the cyst, and its exact diagnosis is not suggested, so that they can only be looked upon as very doubtful cases. This reduces the number to five cases, two of which were reported by Schmidt in 1803, when pathology was not so advanced as now. I may, however, have passed over one or two cases, though I have made a long search for any records of this rare disease.

(*January* 18*th*, 1897.)

Mr. Devereux Marshall said the case described by Mr. Lawson was one of extreme interest. The bodies

which were detected in the cystic fluid seemed to him at first to be of parasitic origin, and it was only after many sections of the cyst wall had been cut that some epithelial cells were found. The cells did not appear to him to be of a columnar shape, but more flattened, similar to those found in the acinus of the gland. Therefore he regarded the growth as a retention cyst of the gland rather than a duct cyst, and the bodies as degenerated and altered epithelium. Mr. Lawson's theory of the origin of these bodies was very ingenious, and some of them showed undoubtedly the fibrin reaction. If, however, the cyst wall was really lined with epithelium, as probably it was at one time, he would have expected that most of these bodies were really masses of cells of this nature. On looking at the fluid under the microscope there seemed to be transitional forms between those which were undoubtedly cells and those which were composed of grouped masses.

---

2. *Implantation cyst of orbit; microscopic section.*

By G. Anderson Critchett and John Griffith.

A gentleman, aged about 30, received an injury to the right orbit six years ago. He was in India at the time, and in possession of some important Government treasures. One night he was attacked by some native robbers, and received a severe cut from a tulwar across his right brow. It cut through the eyelid and penetrated the eyeball. His nose was also wounded.

Six months afterwards he consulted Mr. Anderson Critchett, who excised the shrunken globe for safety's sake. There was complete ptosis. He appeared again last July, owing to a swelling in the upper and outer part of the right orbit immediately subjacent to the scar of the

old wound; but the skin and cicatrix were freely moveable over the tumour.

In October last Mr. Critchett excised it. The size of the cyst was about that of a horse-chestnut. In the operation the cyst was punctured, and about a drachm of clear straw-coloured fluid escaped. The cyst was more adherent to the surrounding tissues than a congenital dermoid.

The microscope shows the cyst wall to consist of a dense fibro-vascular tissue lined by stratified epithelium. No glandular structures or hair-follicles are present, as in the common dermoid cyst.

(*Card specimen. November 12th,* 1896.)

The PRESIDENT asked whether the cyst contained any hairs, and whether glandular structures were seen microscopically.

Mr. JOHN GRIFFITH, in reply, said the cyst contained no hairs or glandular structures. He used the word "dermoid" according to Mr. Bland Sutton's classification, but it was really a conjunctival cyst. He had not seen nor heard of a similar case.

3. *Notes of a case of melanotic sarcoma of the orbit.*

By RICHARD WILLIAMS (Liverpool).

MARY W—, æt. 40, single woman, consulted me between four and five years ago for chronic irido-cyclitis, for which she had been under the care of another surgeon for a considerable time, and who had advised enucleation. Before submitting to this extreme measure, however, she wished to have further advice. After watching the case for a short time I came to the same conclusion as her pre-

vious attendant, and the eye was accordingly enucleated. There was at the time no suspicion of a growth, either malignant or otherwise, and I have no note of whether the interior of the globe was examined or not. The case, in fact, presented no special feature of interest. An artificial eye was fitted, and the patient had no further trouble until the middle of August of this year, when she noticed that the artificial eye took on an appearance of convergent squint, and in consequence of this she came to see me a fortnight later. When I saw her at the end of August there was a distinct turn inwards, the eye having previously been a perfectly good fit. On removing the eye there appeared a well-marked cushion-like swelling, which apparently sprang from the floor of the orbit far back. The sides and roof of the cavity were free, and the conjunctiva over the tumour was also unaffected. I took a serious view of the case, and advised the removal of the tumour, together with as much of the contents of the orbit as practicable. A week later the patient returned, and a distinct increase in the swelling was noticeable. She was admitted into the Liverpool Eye and Ear Infirmary, and the growth was removed on September 10th. In order to reach it more readily the outer canthus was divided, and this having been done, the operation presented no special difficulty. The tumour seemed to spring from the neighbourhood of the optic foramen, and had pushed its way under the conjunctiva up to near the outer canthus. It was irregularly circular in shape, and of the size of a large walnut. It was placed in formol, and subsequently my friend Mr. Thelwall Thomas was good enough to make the accompanying section for me. He pronounces it to be a fine specimen of spindle-celled melanotic sarcoma. The subsequent history of the case presents nothing of importance. When last seen about a month ago the socket was healing, and there was no appearance of a recurrence. The points of interest in the case seem to be—

1st. The origin of the pigment; and it has been

suggested that the eye may have contained a small growth at the time of its removal. I can only repeat that I had no suspicion of such a growth, but I have no positive knowledge on the point.

2nd. Supposing the tumour to be a recurrence, the length of time, four or five years, which elapsed before the recurrence took place.

July 13th, 1897.—The patient writes that "it is free from pain or swelling."

(*Card specimen. December 10th*, 1896.)

---

4. *Sarcoma of orbit; recurrence after removal, with extension to the cranial cavity.*

By Simeon Snell.

The interest in this case is due to the post-mortem examination demonstrating extension of the recurrent growth into the cranial cavity by absorption of the orbital plate of the frontal bone, and the formation there of a considerable tumour, without producing gross brain symptoms; and further, that I am enabled to show some excellent photographs of the tumour *in situ* taken by Mr. Bellamy, one of my students.

Lucy K—, æt. 48, married, was admitted into the Sheffield Royal Infirmary under my care on December 6th, 1895, suffering from a tumour of the right orbit. At this time there was well-marked exophthalmos, the eyeball being pushed forwards, and to a less extent outwards. The movements of the globe were interfered with in all directions, but most markedly downwards and inwards. The tumour was extensive, but occupied chiefly the inner and lower part of the orbit. Vision in right eye was reduced to counting fingers; that of left was normal. The distended veins of right retina gave evidence also of the

extension of the growth to the back of the orbit. The patient, as an out-patient, had been taking potassium iodide for some weeks previously, but with no benefit as far as the affection in the orbit was concerned, and she was therefore made an in-patient, on the date already given, for the purpose of having the growth removed. This was done on December 11th, 1895. Ether was administered, and then the conjunctiva was divided at the outer and lower part, and the incision carried through the external canthus so as to freely open the orbital cavity. The finger was now introduced into the orbit, and the neoplasm rising out of its floor could easily be felt apparently immediately behind the globe and spreading backwards to the apex of orbit, being especially well marked along the inner wall. It also almost reached to the outer wall, but did not appear to be attached there at all. It completely surrounded the optic nerve, and gave the impression of involving it in its structure. It was considered impossible to remove the growth without also excising the eyeball, which was accordingly done, and the orbit was then cleared out. The bulk of the tumour was found to be attached to the floor and inner wall of the orbit. It was removed as completely as possible, and the orbit was freely scraped with a Volkmann's spoon. Finally, lint smeared with chloride of zinc paste was inserted into the orbit. The scraping and removal of the remaining fragments of the growth necessitated opening up of the floor of the orbit (antrum of Highmore ?) and the ethmoidal cells. Hæmorrhage, which was somewhat profuse, was controlled by a swab soaked in hot water, as is used after enucleation of the eyeball.

Recovery was uninterrupted, and she was discharged on January 3rd, 1896.

Microscopic examination of the growth showed it to be a sarcoma, and that it had probably arisen from the lacrymal bone or its immediate neighbourhood.

She was again admitted on March 30th, 1896, with the growth recurrent in orbit.

She was complaining of severe pain of a neuralgic

character in orbit and forehead on right side. The recurrent growth was springing chiefly from the inner wall, but it was very extensive.

Ether was administered, and then the outer canthus was cut through for an inch, and the orbit cleared out and thoroughly scraped with a Volkmann's spoon. Chloride of zinc was more freely used than on the previous occasion. She was discharged at the end of May, 1896.

Before long recurrence was observed again, and pain and sleeplessness complained of.

She was again admitted on February 19th, 1897, complaining of pain of a severe neuralgic character in orbit and forehead on the right side. She was dull and quiet, apparently taking little interest in her surroundings. She was quite sensible, and replied slowly to questions, but was drowsy. There was no paralysis, and no spasm, &c.

The right orbit was filled with a neoplasm which bulged forward the upper lid, to which it was firmly attached. The lid also turned in over the neoplasm, and was so adherent that eversion was impossible. Palpation through the lid revealed a resistent but doughy tumour. The lower lid was also adherent, but not so bulged.

The patient lingered on complaining of pain, which was controlled somewhat by narcotics, finally dying on March 5th, 1897, quite quietly, and without any signs of coma or paralysis. There were no physical signs to suggest secondary deposits in lungs, &c.

Post-mortem examination of the cranium only was allowed.

My house surgeon, Mr. Connell, has kindly given me the following report:—The membranes were thickened and congested over the right frontal hemisphere. The pia mater was adherent, and the vessels injected. The pia mater was removed with slight difficulty, and the brain substance not torn. As soon as the pia mater was removed the frontal lobes on right side were observed to be flattened and pushed backwards, and lying between the brain substance and skull could be seen a neoplasm

in appearance very like the convolutions of brain tissue (Fig. 39). The orbital plate of the frontal bone was next

FIG. 39.

removed with the tumour *in situ*, and to do this the upper lid had to be dissected off the neoplasm. On turning the brain backwards to sever its attachments at the base, the tumour was found to extend, after causing absorption of the greater part of the orbital plate of frontal bone, along the base, compressing the lobes as far back as the region of the island of Reil to near the optic chiasma. The optic nerve had escaped entirely.

The tumour was soft, and had the appearance of brain tissue. Microscopically it was found to be a mixed-cell sarcoma, round cells very markedly predominant.

Some microscopic slides, prepared by Mr. Connell, were exhibited; but as some members appeared to be in doubt as to the growth being correctly described as a sarcoma, the case was referred to a committee consisting of Messrs. Treacher Collins and J. Griffith with Mr. Snell. The report of the two first named is now appended.

(*June 10th*, 1897.)

Report of committee on Mr. Snell's case of orbital tumour.

We have examined the sections of the orbital growth submitted to us, and find it to be composed of cells and fibro-vascular tissue.

The cells are not uniformly distributed, but present a definite structural arrangement. They are collected together into columns which branch, bend, and anastomose in different directions. In some parts they are definitely arranged in a tubular fashion. The cells have round and oval nuclei, but the outline of their body protoplasm is indistinct. The faintly granular material which surrounds a nucleus blends, with scarcely any perceptible break or line of separation, with that around adjacent nuclei. Hence it is impossible to say exactly what is the shape of the cell elements.

The columns of cells cut longitudinally and obliquely in places show a distinct double row of cells, and those cut transversely a ring of cells with a central lumen. The blood-vessels are everywhere supported by a substantial network of fibrous tissue ; and in no part of the growth can vessels be seen, the walls of which are composed of the above-mentioned cellular elements.

From the appearances of the growth above described we conclude that it is a *glandular carcinoma*, and that it probably primarily grew from the mucous membrane of the nose, and secondarily invaded the orbit and cranial cavity.

There is, however, no evidence in the report of the case that the nose was at any time affected.

E. Treacher Collins.
John Griffith.

June 25th, 1897.

5. *Enophthalmos becoming exophthalmos on stooping or on compression of the jugular vein.*

By W. Lang and A. H. Thompson.

A. R—, æt. 20. The left eyeball in the erect position is ordinarily somewhat retracted, but on stooping or on compression of the left jugular vein it very rapidly becomes proptosed. The condition has existed from childhood, and there is no history of traumatism. At times the proptosis is attended by very considerable pain, and at the age of eleven the patient remembers this pain to have lasted for three or four days and nights together.

Vision: R. $\frac{6}{6}$, J. 1; L. $\frac{6}{60}$, emmetropic, but reduced to barely counting fingers in the proptosed condition.

In July, 1893, when the patient first attended Moorfields, the condition of her left eye is noted as one of optic neuritis. In September, 1893, it is noted as one of optic atrophy. At present the disc is atrophic. There is no bruit. There are no visible varicose veins elsewhere.

References to previous cases.

1. *Mr. Treacher Collins's* case ('Trans. Ophth. Soc.,' 1895, p. 240). Man of seventeen; not noted whether the exophthalmos was produced by compression of the jugular.

2. *Van Duyse* and *Bribosia* ('Arch. d'Opht.,' March, 1895). Man of twenty-nine; history of traumatism. The suggested explanation of this case was a primary atrophy of the cushion of fat in the orbit, due to injury of the trophic nerves and secondary vascular dilatation.

3—5. Three cases referred to by *Van Duyse* in the above-mentioned article, all of them explained as cases of retro-ocular varicose veins (Magnus, 1884; Gessner, 1889; and Sergent, 1893).

6. *Dolgenkow*, 1886 (summarised by Nagel, p. 473).

In this case there was no enophthalmos, and the exophthalmos was never wholly reduced. There was a history of traumatism, and a faint bruit was heard. Explained as a case of cavernous angioma.

7. *Grüning* ('Arch. of Ophth. and Otol.,' New York, 1873–4, vol. iii, p. 23). This also was explained as a cavernous angioma. The onset was sudden while the patient was engaged in carpeting a floor.

8. *v. Kempf* ('Allgem. Wien. med. Zeit.,' 1864, vol. ix, p. 131). This case was supposed also to be a cavernous angioma, but some years later v. Kempf heard that the eye had been excised and "fungus hæmatodes" been found.

(*Card specimen. May 6th*, 1897.)

Mr. Lang supplemented the particulars given by Mr. Thompson by stating that when the patient brought on the proptosis herself it soon went back, but when it came on spontaneously it usually did not disappear for a long time. Last time she presented herself at the hospital the pain was very great, and the proptosis had come on spontaneously during lunch. She was attended by the house surgeon, who gave her something to drink, and was surprised to see the condition disappear quickly afterwards, with relief of the pain. It was probably on one of the prolonged occasions that the neuritis mentioned had been set up. In reply to the President, Mr. Lang said no varicose veins had been seen on the face or forehead. There had not been any inflammatory symptoms suggestive of thrombosis, because the eye had gone back spontaneously. In reply to Mr. Jessop, Mr. Lang said he had not tried to bring the eye back by pressing the carotids.

Mr. Priestley Smith said that a good many years ago he saw a patient much like the one before the Society. He was an elderly man, who dated the affection from an injury to the head when he was a boy. The condition was in the left eye, and was even more marked than in

the present case. When the patient was upright there was a deep hollow around the eyeball; when he stooped the eye protruded in a very striking manner. It was attributed to some varicose condition of the veins behind the eyeball, set up by the injury. No serious consequences seemed to have ensued.

Dr. Habershon thought these attacks were not incompatible with the theory that there was angioma or some collection of veins, because, to make a rather rough analogy, it might be almost comparable to the condition of hæmorrhoids, where there might be periodic turgescence of vessels without there necessarily being thrombosis—a condition which might last for a few days and then pass off. The President had suggested that this might happen from some obstruction in the orbit. It was a little difficult to see why such should happen, but it did not seem improbable that in the orbit itself there should be some cause for obstruction and great turgescence.

6. *Foreign body in the orbit for four years; sympathetic irritation; excision of the blind eye; recovery.*

By John R. Lunn and Charles Devereux Marshall.

Annie B—, æt. 34, was admitted into St. Marylebone Infirmary, Notting Hill, March, 1897, and stated the left eye was injured by being struck with a glass tumbler four years before. The wound was examined at a hospital, and the patient was told that no glass remained. The eye has been sightless ever since the accident. It was removed on account of its causing sympathetic irritation.

Report on the specimen by Mr. D. Marshall.

The left globe is much shrunken, and lying in the orbital fat behind and on a line with the upper part of the

globe are two thick pieces of glass, one being about five or six times as large as the other. These two pieces are encapsuled, and lie close to the globe ; part of the wall of the capsule has been dissected away in order to show the foreign bodies. On section the globe is seen to be much shrunken, the sclerotic is greatly thickened, and the cornea is opaque. The interior of the eye is almost solid, being occupied by the calcareous lens (the greater part of this has fallen away), and also by the much thickened choroid and retina. A scar is seen at the upper corneo-sclerotic junction, and this is evidently the place where the glass entered, and after having travelled across the globe it again wounded the sclerotic, and remained in the position in which it is now seen. There is no glass actually within the globe.

(*Card specimen. June 10th,* 1897.)

X. CONGENITAL ABNORMALITIES.

1. *Microphthalmos with cystic protrusion from the globe.*

By E. Treacher Collins.

In 1893 I described to this Society three congenitally microphthalmic eyes I had examined microscopically, in which there was a protrusion of retinal tissue through a gap in the sclerotic. I had previously described another case of a similar character recorded by Mr. Lang in the 'Royal London Ophthalmic Hospital Reports' (vol. xii, p. 289). Since 1893 I have examined three more microphthalmic eyes presenting this abnormality,—one removed by Mr. J. R. Rolston, who kindly entrusted me with the pathological examination of the specimen, and two I have removed myself from patients under my care at the Moorfields Hospital, which I have to show you this evening.

Having thus had considerable material upon which to study this rare form of congenital malformation, I may presume to generalise, and propose to give you a description of it drawn chiefly from the seven eyes I have examined, but also partly from those described by others.

Though the patients presenting this abnormality of the eye are frequently the subjects of malformations of other parts of the body (Kundrat's cases [1]; Case 1, 'Trans. Ophth. Soc.,' vol. xiii; Case 2 in this paper), it also occurs in individuals who are in all other respects apparently perfectly healthy and well formed (Case 2, 'Trans. Ophth. Soc.,' vol. xiii; Case 1 in this paper).

Though all my specimens are alike in one particular, namely, in being microphthalmic eyes with a protrusion

of retinal tissue through a gap in the choroid and sclerotic, the differences which they present, both as regards the character of the protrusion, and in the state of development or mal-development of the other structures of the eyeball, are truly remarkable.

The protuberant portion of retina consists of varying amounts, from simply a knuckle of tissue (Case 1, 'Trans. Ophth. Soc.,' vol. xiii) to quite two thirds of that membrane (Case 1 in this paper, Fig. 40). In some cases it forms solid mass surrounded and intermixed with bands of fibrous tissue (Case 1, 'Trans. Ophth. Soc.,' vol. xiii; Case 1 in this paper, Fig. 40). In others, folds of retina have become distended into one or more fluid-containing cystic protrusions, which are bounded externally by a fibrous-tissue coat, and have a very lobulated outline (Lang's [2] case; Case 2, 'Trans. Ophth. Soc.,' vol. xiii; Rolston's case; Case 2 in this paper).

The degree of development of the protuberant retina is also very different in different cases. When folds of it have become distended in the form of cystic protrusions, it may be so atrophied as merely to be represented by a few groups of nuclear bodies and a little retiform tissue (Lang's [2] case; Case 2, 'Trans. Ophth. Soc.,' vol. xiii). On the other hand, it may remain so well developed that some of its different layers are easily distinguished (Case 2 in this paper). In these latter cases it is found that sometimes the inner surface of the retina is turned towards the interior of the cyst (Rindfleisch [3]) and at other times just the reverse, the inner surface of the retina being directed towards the fibrous outer wall of the cyst (Case 2 in this paper; De Lapersonne [4]; Czermak [5]).

The region of the globe in which the protrusion is situated is nearly always its lower and posterior part, sometimes a little further forwards than others. In one case, besides the gap in the sclerotic there was a considerable deficiency in the outer sheath of the optic nerve (Rolston's case).

Speaking generally, the larger the amount of the retinal protrusion, the smaller and more imperfectly developed is the eyeball. When the protrusion is not very extensive the eyeball may present little external evidence of malformation beyond its defect in size. The lens and vitreous may also appear quite normal (Case 1, 'Trans. Ophth. Soc.,' vol. xiii, R. eye). On the other hand, there are numerous congenital defects of the eye which may exist together with this protrusion of retina.

The cornea may be exceedingly small, out of proportion to the rest of the globe, and in addition to being small, opaque, with blood-vessels coursing through its anterior layers (Lang's [2] case; Case 2, 'Trans. Ophth. Soc.,' vol. xiii; Cases 1 and 2 in this paper). The fœtal cornea in no stage of its development has any blood-vessels formed in it, so that this vascularisation of the cornea is not simply a persistence of any fœtal condition. In one case the cornea was abnormally large for the size of the globe, and globular, as in buphthalmos (Rolston's case).

The sclerotic is usually unduly thick, and in some cases there exist embedded in it plates or nodules of well-developed hyaline cartilage (Case 2 in this paper (Fig. 41); De Lapersonne [4]; Mitvalsky [6]). This formation of hyaline cartilage in the sclerotic is very remarkable, and the only thing I know with which to associate it is the sclerotic of a bird in which normally hyaline cartilage exists, somewhat comparable in its arrangement to that in one of my cases.*

The iris, besides being small, may present no congenital deficiency (Case 1 in this paper; Case 1, 'Trans. Ophth. Soc.,' vol. xiii, R. eye). Bands of pupillary membrane may be persistent (Case 1 in this paper; Case 1, 'Trans. Ophth. Soc.,' vol. xiii, R. eye), or there

* Mr. Marcus Gunn has called my attention to a description of the eye of the *Ornithorhynchus paradoxus*, or duck-mole, published by him in the 'Journal of Anatomy and Physiology,' vol. xviii, p. 400, in which he mentions plates of hyaline cartilage existing in the sclerotic.

may be a coloboma present (Lang's case ; Case 1, 'Trans. Ophth. Soc.,' vol. xiii, L. eye ; Case 2, vol. xiii ; Rolston's case).

The ciliary processes often become drawn backwards, being elongated and thin (Case 1, 'Trans. Ophth. Soc.,' vol. xiii, L. eye ; Rolston's case ; Case 2 in this paper). The pigment epithelium overlying them may show disturbance (Case 1 in this paper; Rolston's case), and sometimes the unpigmented layer of the *pars ciliaris retinæ* is raised in folds, which shows imperfect coaptation of the two layers of the secondary optic vesicle in that position (Case 2 in this paper).

The lens is generally imperfectly developed and cataractous, usually spherical in shape (Lang's case [2] ; Case 1, 'Trans. Ophth. Soc.,' vol. xiii, L. eye ; Case 2, vol. xiii ; Rolston's case ; Case 1 in this paper), and sometimes displaced.

The vitreous humour is often imperfectly formed, being in part replaced by a kind of fibrous tissue which may have blood-vessels coursing through it (Case 1, 'Trans. Ophth. Soc.,' vol. xiii, L. eye ; Rolston's case ; Case 2 in this paper). This formation of fibrous tissue in place of vitreous humour, apart from any signs of inflammation, is a condition to which I particularly wish to direct your attention. It has been termed by Hess (7) "atypical development of the vitreous humour,"—that is to say, the mesoblast which should have formed vitreous has developed in an atypical way and formed fibrous tissue. I have met with this malformed vitreous humour, in eyes which I have examined pathologically, in various positions. I have found it forming a membrane of varying thickness behind the lens, into which sometimes the central hyaloid artery has passed and divided up ; as irregular bands passing forwards from the optic disc ; as a thick mass on the inner surface of the globe in the region of the ocular cleft ; and in one of the specimens which I am bringing before you for the first time this evening, it would seem, that the mesoblast which should

have formed the vitreous had almost entirely failed to pass into the globe, but had, instead, developed into fibrous tissue beneath it. With this fibrous tissue the protuberant and folded retina has become intimately intermixed.

As I have said, I particularly wish to draw your attention to the possibility of this atypical development of the vitreous humour, because it helps to explain a group of cases in which the ophthalmoscopic appearances are often rather perplexing. Scattered throughout ophthalmic literature will be found the records of a number of eyes, the sight of which, the history states, has been defective since birth; which, when examined ophthalmoscopically, are found to have irregular bands of fibrous tissue in the vitreous chamber, often with blood-vessels coursing through them.

Some have thought these cases to be of the nature of what is termed "retinitis proliferans," to the ophthalmoscopical characters of which they frequently bear some resemblance; from which, however, they differ in not following on or being associated with any intra-ocular hæmorrhage, in being non-progressive, and in dating from birth. Others have attributed these bands of fibrous tissue in the vitreous chamber to persistence of the central artery of the vitreous or the canal of Cloquet; but anyone who has seen under the microscope what the central hyaloid artery and the canal of Cloquet consist of in the fœtal eye, will at once realise that the mere persistence of these structures will not account for the dense bands and collections of fibrous tissue which are sometimes seen.

Returning now from this digression concerning atypical development of the vitreous humour to the condition of the microphthalmic eyes with retinal protrusions, I find the retina in these eyes, except in the region of the protrusion, may be situated in its normal position. More frequently it is raised in rucks from the pigment epithelial layer beneath, which rucks often become much folded. On

the inner surface of the choroid are frequently seen nodules of hyaline substance lying amongst the pigment epithelial cells (Case 2, 'Trans. Ophth. Soc.,' vol. xiii), and also sometimes a formation of bone (Rolston's case). Hyaline nodules of a similar character are also sometimes met with in the retinal tissue in the interior of the cystic protrusions where no choroid is present (Case 2, 'Trans. Ophth. Soc.,' vol. xiii; Rolston's case; Hess [7]).

In my former communication on this subject to this Society, I referred to the various theories which have been put forward to explain these protrusions of retinal tissue through gaps in the other tunics of the globe. I need not repeat them here, but content myself with the following statement. In all the specimens which I have examined the changes are best explained by considering the inner layer of the secondary optic vesicle to have become unusually rucked and folded, due to some imperfect development of the vitreous humour or delayed closure of the cleft; that, as the result of this rucking and folding, a portion of the inner layer of the secondary optic vesicle has become extruded through the fœtal ocular cleft into the subjacent mesoblast, where in some cases it has subsequently become expanded into one or more fluid-containing cysts.

Case 1 (Clinical notes by Mr. Fischer, House Surgeon).—William M—, æt. 28, admitted to Moorfields Hospital August 10th, 1896. Patient stated that his right eye had been small and shrunken since birth. A doctor who examined it on the third day after birth said it was blind. The condition was attributed to a fright his mother received while pregnant. Recently it has been very painful, the pain coming on in recurrent attacks, and at times the sight of his left eye getting misty.

The right globe was small, and almost completely hidden by overlapping conjunctiva. The left eye was perfectly healthy, and V. $= \frac{6}{6}$. The patient presented no other congenital abnormality.

On the day of admission the right eyeball with a cyst attached to the back of it was excised.

Pathological examination.—Macroscopical appearances.—The eyeball measured only 8 mm. antero-posteriorly and 8 mm. laterally. In front was a small clear cornea, measuring 3 mm. laterally; and behind, the point of section of the optic nerve could be recognised. Attached by a broad pedicle to the lower and posterior part of the globe was a protuberance, the wall of which was continuous with the sclerotic (Fig. 40). In front a deep sulcus separated this mass from the globe. Posteriorly the protuberant mass had been cut into in its removal, and it was seen to be a cyst filled with greyish lobulated contents. The cyst measured 17 mm. antero-posteriorly, and 8 mm. laterally. On section of the globe the cornea, though small, was seen to be of about the normal

Fig. 40.

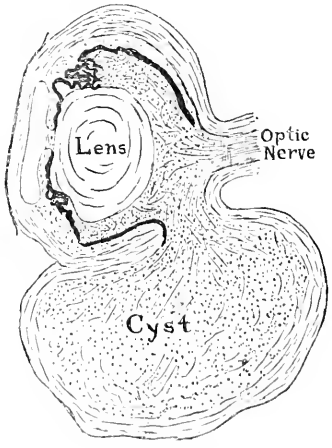

thickness. The anterior chamber was well formed but shallow. The iris and ciliary body, though small, were not absent in any part of their circumference.

The interior of the globe behind the iris was almost entirely filled by the lens, which was spherical in shape,

measuring 2 mm. laterally and antero-posteriorly. It had some calcareous deposit in it. No break was observed in the continuity of the sclerotic from the margin of the cornea to the optic nerve at the upper part of the globe. In the lower part a little behind the equator the sclerotic appeared to end abruptly, and there was a gap in it from this point to the lower border of the optic nerve (Fig. 40). Where the sclerotic was deficient, the cystic mass above referred to was attached to the globe, its outer wall being continuous with sclerotic. There was hardly any retina in the globe; nearly all of it was contained in the mass below it, where it formed the folded membranous contents of the cyst.

Microscopical appearances.—The epithelium on the anterior surface of the cornea is thick, and its base line very irregular. There is no anterior elastic lamina. In the anterior part of the substantia propria there are some variously sized, thin-walled blood-vessels, and an excess of cells. The posterior part of the substantia propria is free of blood-vessels, and more regularly laminated.

Descemet's membrane and its lining endothelium appear normal, except that there are numerous little hyaline nodules on its inner surface at the periphery. The canal of Schlemm is well formed.

The tissue of the iris is denser than normal; a rudimentary sphincter muscle is present. The two layers of pigment on its posterior surface are distinctly shown, as they have become somewhat separated. Portions of the pupillary membrane have remained persistent.

The ciliary muscle is more cellular than usual; longitudinal fibres are distinctly seen in it. In its posterior part there is some round-celled tissue. The pigment epithelium on the inner surface of the non-plicated portion of the ciliary body has undergone proliferation, and many tubular processes of pigmented cells are seen cut, some longitudinally, and some transversely. On the inner surface of the pigment epithelium of the ciliary body,

instead of a single row of cells there is a sort of degenerated retinal tissue with calcareous granules in it. This tissue is continuous with the retina behind the lens. The choroid at the upper part is thick and vascular. Below it cannot be traced very far before the break occurs in the continuity of it, and of the sclerotic. Round the edge of the termination of the sclerotic the choroid and pigment epithelium turn and extend for a short distance.

The sclerotic at the lower part of the globe is continuous with a mass of fibrous tissue, which forms the anterior part of the thick outer wall of the cyst; its limits cannot be defined. The retina does not present its normal layers, but consists of branching cells, bundles of fibres like Müller's fibres, and collections of nuclear bodies. The gap in the sclerotic and choroid is filled with this altered retinal tissue, and continuous with it are the contents of the cyst, which bear only a slight resemblance to the retina, being composed of a dense network of fibres and nuclear bodies, with here and there patches of deeply staining calcareous matter. Mixed up with this tissue are numerous bands of fibrous tissue. The posterior wall of the cyst is not shown in the sections, nor is the point of entrance of the optic nerve.

Case 2.—William L—, æt. 14 weeks, was brought to me at the Moorfields Hospital by his mother on March 8th, 1897, on account of a congenital defect of his left eye. She stated that the condition of his left eye when born was exactly as it is now, except that there was a red growth at the outer angle of the lids the size of a pea, which the doctor who was attending her removed with a piece of silk. No instruments were used at the birth. There had not at any time been more than a slight discharge from the eye. The lids on the left side did not meet at the outer canthus, there was a small gap left between them, where injected conjunctival tissue was exposed.

On separation of the lids an exceedingly small eyeball was seen; what appeared to be the cornea, from the position of the insertion of the conjunctiva, was a very small opaque patch. There was a mass of firm tissue felt adherent to the lower and outer part of the rudimentary globe.

The child's right eye was normal. He had a large hairy mole on the left temple, and an oval pigmented patch of skin over the left parietal bone.

On March 15th, 1897, I removed the small eyeball with the mass attached to it, because it was absolutely useless, and would have prevented his wearing a glass eye. I afterwards pared the edges of the lids at the outer canthus, and united them over the exposed conjunctiva.

Pathological examination: microscopical and macroscopical appearances.—The small spot on the surface of the globe, around which the fringe of conjunctiva was attached, and which appeared to be the rudimentary opaque cornea, measured 4 mm. by 1 mm. Above and behind it, in the wall of the globe, a hard flat plate of tissue was felt, behind which again the optic nerve was seen where it had been cut across. Attached to the lower part of the globe in front of the optic nerve was a lobulated thin-walled cyst, the front wall of which had been cut into, and from which, on pressure, a clear straw-coloured fluid was made to exude.

After the specimen had been hardened in formol it was opened by an antero-posterior section, and subsequently microscopic sections were cut.

The area on the surface of the globe, around which the conjunctiva was attached, and where the anterior epithelium of the cornea is situated, does not extend over nearly the whole of the substantia propria, but only one side of it. This surface epithelium is prolonged into the subjacent fibrous tissue in the form of finger-like processes, so that it presents a very irregular base line; beneath it there is no sign of any anterior elastic lamina.

In front of a large part of the cornea, and partly embedded in it and partly in the sclerotic, is a broad plate of hyaline cartilage. This cartilage ends anteriorly in a rounded extremity amongst the fibrous tissue beneath the epithelium of the conjunctiva. Posteriorly it also ends in a rounded extremity surrounded by fibrous tissue, and projects as a sort of spur from the sclerotic about the

FIG. 41.

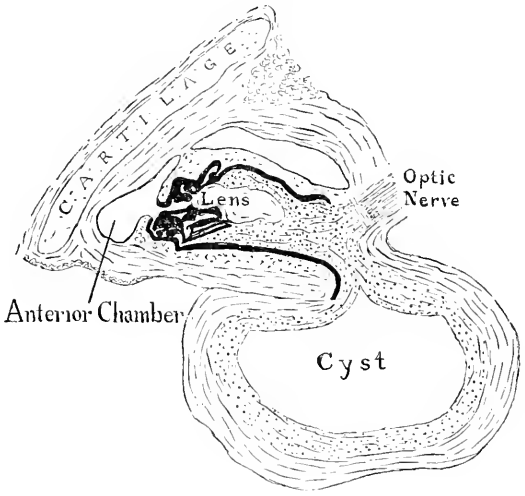

equator of globe, there being fatty tissue in the recess left between the spur and the sclerotic (Fig. 41). There is a second piece of hyaline cartilage in the sclerotic on the opposite side of the globe to the other, which commences posteriorly in a rounded extremity a short distance from the optic nerve; the anterior termination of it is not shown in the sections. In some sections this last piece of cartilage is seen as a circular patch lying in the fibrous tissue between the eyeball and the cyst. The substantia propria of the cornea is fairly regularly laminated; amongst its layers immediately beneath the plate of hyaline cartilage are some blood-vessels. Near the sclero-corneal margin on the side furthest from the surface

epithelium there is a cleft in the fibrous tissue, containing adipose tissue. The posterior elastic lamina and its lining endothelium are well formed; it is much wrinkled.

There is a shallow anterior chamber. The iris, though very small, is fairly well developed; there are blood-vessels in its stroma, and a rudimentary sphincter muscle; the pigmented epithelium on its posterior surface is folded and irregular. The ciliary body, for the size of the globe, is large, and the ciliary muscle very cellular. The ciliary processes are long and thin, and are directed backwards; they lie in contact with the wrinkled lens capsule. It can be quite distinctly made out that there is a layer of pigmented and a layer of unpigmented cells covering them; the unpigmented cells, the pars ciliaris retinæ, is prolonged backwards in places in folds away from the pigmented layer. The choroid is very cellular and unpigmented. The lens capsule is well developed; it is lined throughout by a single row of cells, and is much wrinkled. The amount of lens substance is very small; it consists of nucleated fibres and swollen globular epithelial cells. A small amount of fairly healthy though condensed vitreous is seen between the lens and the folded retina. The retina in places is well developed, presenting all its normal layers, and lying in contact with its pigment epithelium. The posterior part of the globe is filled with well-developed, much-folded retina. A section passing across the neck of the cyst shows retinal tissue passing out from the interior of the globe, through a narrow gap in the sclerotic at the margin of the optic nerve (Fig. 41).

There is some pigment in the retinal tissue passing through the gap, which does not, however, extend further than the neck of the cyst.

The cyst walls are very irregular, and present many projections and recesses. The cyst everywhere has two coats, an outer of fibrous tissue continuous with the sclerotic, and an inner of ill-developed retinal tissue. In this inner coat the layers are sufficiently differentiated to

make it evident that the inner surface of the retina is directed outwards, and the outer surface towards the interior of the cyst. Where it is best developed the nerve-fibre layer and the ganglion-cell layer can be distinguished; the granular layers appear to have run together: the membrana limitans externa is present, but there are no rods or cones.

Authors referred to in the paper.

(1) *Kundrat.* 'Wien. med. Blätter,' Nos. 51, 52, and 53.

(2) *Lang, W.* 'Royal London Ophthalmic Hospital Reports,' vol. xii, p. 287.

(3) *Rindfleisch.* 'Archiv für Ophth.,' Bd. xxxvii, Abth. 3, s. 192.

(4) *De Lapersonne.* 'Archives d'Ophtalmologie,' t. xi, p. 207.

(5) *Czermak.* 'Wien. klin. Woch.,' 1891, p. 448.

(6) *Mitvalsky.* 'Archives of Ophthalmology,' vol. xxii, p. 355.

(7) *Hess.* 'Archiv f. Ophth.,' Bd. xxxvi, Abth. 1, s. 135; and Bd. xxxviii, Abth. 3, s. 93.

(*July 2nd*, 1897.)

---

2. *A case of microphthalmos with cyst.*

By John R. Rolston.

Alice W—, æt. 12 years.

Family history.—Good.

History of present case.—Mother says that the child was born with defective eye (right). There is a vague history of (?) purulent conjunctivitis during infancy. Two weeks ago mother noticed that there was a swelling towards the lower and outer part of globe.

Present condition (March 3rd, 1897).—*Left eye.*—V. $\frac{6}{6}$ + 1 D. sph. = $\frac{6}{5}$. Normal in every respect.

Right eye.—There is a prominent swelling of anterior part of eyeball, giving the appearance of a corneal staphyloma; there is a transverse broad whitish mark, corresponding to position of palpebral aperture, and having the appearance of a corneal opacity produced by lead. Conjunctival vessels from below and above run up to this transverse mark. Below and out, corresponding to position between insertion of external and inferior recti, there is a distinct swelling, dark bluish colour, which feels harder than the eyeball proper. There has been no pain.

March 5th.—The globe with cyst was removed. During removal, which was attended with much difficulty owing to the apparent adhesion of atrophied tendons to surrounding tissues, the cyst burst; the cyst wall at point of rupture was much attenuated, and owing to surrounding hæmorrhage it was difficult to determine the nature of its fluid contents, but I am of opinion that the fluid was colourless.

Pathological report by E. Treacher Collins.

Specimen consists of a small eyeball with a cyst attached to it. The cornea is very globular, and large for the size of the globe; it measures 15 mm. in one diameter, and 12 mm. in the opposite one. The sclero-corneal margin, marked by the insertion of the conjunctiva, corresponds in position to the centre of the globe, the cornea in front of it being unusually large, and the sclerotic behind it unusually small. The cyst projects from the posterior part of the globe, and from one side, which cannot be determined. The optic nerve seems to pass into one side of the cyst with a direction forwards.

On section of the globe and cyst antero-posteriorly the cornea is seen to be unusually thick (Fig. 42). The sclerotic on the side from which the cyst projects, is continuous

a little behind the equator of the globe with the outer wall of the cyst. On the opposite side the outer wall of the cyst is continuous with the outer sheath of the optic nerve, which bends outwards on one side about 3 mm. distant from the ocular end of the nerve.

The iris in some parts is unusually long, and appears to be in contact with the back of the cornea; over a large part of its circumference the iris is absent. This

FIG. 42.

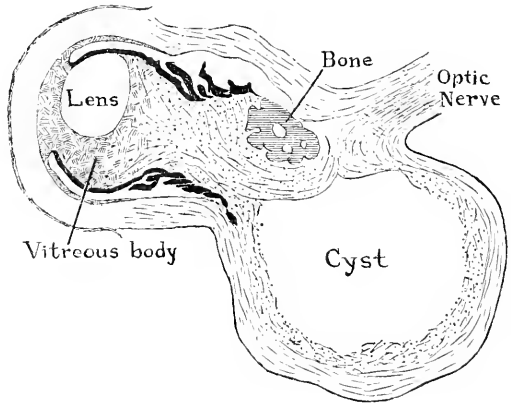

coloboma of the iris does not correspond in position to the part of the globe to which the neck of the cyst is attached. The lens is shrunken and calcareous; it is displaced forwards and to one side. Behind the lens the interior of the globe is filled with a folded membrane.

The cyst, besides its outer wall, continuous with the sclerotic and optic nerve sheath, has an inner folded lining membrane continuous with the folded membrane inside the globe. The neck of the cyst where it joins the globe measures 6 mm. across. There is some bone on the inner surface of the choroid near the neck of the cyst.

Microscopical examination.—The epithelium on the surface of the cornea is of about normal thickness. No anterior elastic lamina is visible. The fibrous tissue of

the substantia propria is very irregular; bundles of fibres are seen in the sections cut transversely and longitudinally, and it is not regularly laminated. Several large blood-vessels are seen in the fibrous tissue of the cornea, both amongst its anterior and posterior layers. Descemet's membrane and its lining endothelium cannot be distinguished. Immediately behind the cornea, filling the space between it and the iris, is some tissue composed of a delicate network of fibres with a very fine mesh; in this network are a few scattered branching nucleated cells, and also some blood-vessels. Tissue of the same character is situated behind the iris where the lens is not present, and fills all the space between the altered folded retina, the shrunken lens, and the back of the iris.

The sclerotic can be traced round on one side from the margin of the enlarged cornea to the sheath of the optic nerve. It is thicker than normal, and the bundles of fibres composing it are very irregularly arranged. On the opposite side of the globe, as already stated, the outer wall of the cyst is continuous with the sclerotic and the outer sheath of the optic nerve. This outer wall of the cyst presents varying degrees of thickness, at one place being equal to that of the sclerotic, and at another only one third of its thickness. After the outer sheath of the optic nerve has bent outwards to form the wall of the cyst, the inner sheath is continued on as far as the lamina cribrosa, which presents its normal appearance. Where the inner sheath terminates in the region of the cyst, there is a small mass of pigmented and vascular tissue like that of the choroid.

The iris, where present, is thin and elongated; it follows the contour of the inner surface of the cornea, being separated from it by the tissue already described. The pigmented epithelium on its inner surface is very irregular, having in some parts undergone proliferation. In the region of the coloboma of the iris the uveal tract ends about the position of the sclero-corneal margin in a rounded but not very well-defined termination, which is

surrounded with the network of tissue filling the anterior and posterior chambers. In amongst this network of tissue, where the iris is deficient are strands of dense fibrous tissue with blood-vessels in them, running across the anterior chamber.

The ciliary muscle as such cannot be distinguished, there only being fibrous tissue in the position where it ought to be. The supra-choroidal lymph tissue overlying what represents the ciliary body is increased in amount. The ciliary processes, which are much disorganised, are drawn backwards, are very attenuated, and have their pigment epithelium much disturbed.

The choroid on the side opposite to the cyst, though extending over a very small area, is very thick, and has on its inner surface some well-formed bone, round about which there has been a considerable proliferation of the pigment epithelium. On the side of the globe from which the cyst springs the fibrous tissue which represents the ciliary body has only just terminated, and the vascular tissue of the choroid commenced, when the sclerotic turns outward to form the outer wall of the cyst, and at the neck of the cyst the choroid ends.

The retina, with which the greater part of the interior of the globe is filled, nowhere shows any arrangement into definite layers ; it is everywhere composed of a network of fibres and of nuclear bodies similar to those normally met with in the retina : no rods or cones are anywhere to be seen. In the substance of the retina within the globe some circular hyaline patches are situated. The retina passes out of the globe into the cyst where the sclerotic is deficient. At the neck of the cyst the retina has become much compressed by the development of bone on the inner surface of the choroid.

The inner wall of the cyst is continuous with the retina passing out from the interior of the globe, and is composed of tissue of a similar character. This inner wall varies much in thickness ; in places there are collections of fibres like Müller's fibres of the normal retina.

In others there are hyaline masses like those often met with on the inner surface of the membrane of Bruch in pathological conditions. In no part of the inner wall of the cyst is there any differentiation into layers, though there are many patches of nuclear bodies in it. No central artery is seen in the sections of the optic nerve.

(*July 2nd*, 1897.)

---

3. *Congenital closure of the inferior lacrymal punctum, and absence of the canaliculus; operation and cure.*

By H. Macnaughton Jones, M.D.

Congenital abnormalities of the puncta and canaliculi are, of course, occasionally met with, though, for my own part, I had not prior to this seen any adult with absolute absence of the papilla and punctum, and at least a portion of the canaliculus, which had evidently existed since birth. This, however, I not only absolutely satisfied myself of with strong lenses, but demonstrated to others. The patient is twenty-two years of age, and has had, for as long as she and her parents can recollect, a constant epiphora of the right eye, so much so that its appearance was altered, and occasionally her eye and cheek became inflamed from the watering. She consulted me in April, 1896, for a difficulty in nasal breathing due to turbinal hypertrophy, specially marked in the right nasal passage, which yielded to free cauterisation of the middle and inferior turbinals. Thus I came to notice the moisture of the right eye and the disfiguration attending it. The upper punctum was present, though unusually minute, and I was able to pass the finest probe along the canaliculus. I determined to make an effort to form a lower canaliculus, and chance hitting upon the lumen of a partially obliterated canal. Accordingly, having had the patient placed under ether, I entered a straight Bowman's canaliculus knife at the

normal site of the punctum, and slit up the mucous membrane in the usual manner, using also a Weber's knife to complete the section. I then tried to pass a small-sized bulbous probe into the nasal duct, but found that at a very short distance from the orifice it was obstructed by stricture or otherwise. I resolved to enlarge it, and by a process of forcible dilatation I passed the larger sizes, finally getting the largest I had by me, No. 6 (3 mm. in diameter), into the duct, which was then washed out with boric solution. This was in the first week of May, 1896. Despite daily attention, I found the lacrymal slit closing, so in about three weeks after the first operation I again freely opened and enlarged the canal, passing for a second time the large probe into the duct. From this time forward, with daily care, the wearing of a medium-sized probe from a quarter of an hour to twenty minutes, antiseptic douching of the duct with a syringe and hollow probe, she so far recovered that I was enabled to send her back to Belfast in July, where she went under the care of Dr. Nelson, who from this date kindly took charge of the case. She visited him every day for two months, then every other day, and finally wrote to me on November 5th, 1896, saying, "I only go once a month now, and am never troubled with any tear. My eye feels much stronger in consequence." She has had no interference since November. There has been no watering nor the least discomfort, and the disfiguration has entirely disappeared.

(*Card specimen. January 28th*, 1897.)

---

4. *Congenital malformation of the puncta lacrymalia.*

By R. W. Doyne.

Lucy N—, æt. 6.

On the right side the upper punctum is completely absent. There is no indication of a punctum in the normal position

in the lower lid, but just inside the lid is a small line ending in a blind depression, which probably represents a rudimentary canaliculus and punctum.

On the left side there is a depression in the lower lid corresponding to the usual position of the punctum. The left upper punctum appears to be the only one of the four so developed as to perform its function. The tears do not seem to run over the cheeks to any extent. This may possibly be explained by the presumption that the functional activity of the lacrymal gland in moistening the surface of the eye varies with the demand made upon it. In this patient the demand can never be great, as there is a permanent pool at the "*lacus lacrymalis.*"

(*Card specimen. May 6th*, 1897.)

Mr. Priestley Smith remarked that, as there was no overflow of tears, it might be that the tear puncta were absent, because there was no need for them.

---

5. *A case of arrest of development of the crystalline lens with apparent (? real) subluxation outwards.*

By John Griffith.

This little girl, æt. 5½ years, was noticed to squint with her left eye three years ago; her mother at the same time saw that there was something white in the pupil. No history of any ocular trouble before that date. She was advised by Dr. Seager to consult Mr. Juler, to whom I am much indebted for permitting me to show the case.

Her R. E. is normal in every respect.

The L. E. deviates inwards. The crystalline lens is apparently displaced directly outwards. It is opaque, but not entirely so in its outer part. The inner margin

is visible, and is almost straight like some forms of lental coloboma. Stretching across the gap from the inner side to the posterior surface of the lens are some pigmented bands, probably ciliary processes, glued by their apices to the lens. No suspensory ligament is visible. The tension is normal. Inner half of anterior chamber is deeper than the outer half; the latter appears more shallow than normal.

Remarks.—This case is interesting in that we have clinical evidence of a congenital defect of the inner part of the lens associated with adhesion of the ciliary processes to its posterior surface, and no evidence of the suspensory fibres of the lens. The adhesion of the cells which cover the ciliary body to the capsule of the lens is, according to Treacher Collins's hypothesis, the first stage in the development of the suspensory ligament, and the want of this adhesion is a cause, in his opinion, of congenital subluxation of the lens. Here we have the adhesion formed, and get apparent subluxation outwards, *i. e.* in a contrary direction to that which we would expect. It appears as if the ciliary processes are more yielding than the adhesions which should be contracted, and become attenuated between them and the capsule of the lens in the natural order of this developmental process of the suspensory ligament.

(*Card specimen. January 28th,* 1897.)

Mr. Treacher Collins pointed out that the ciliary processes on the inner side, in this case, did go on towards the equator of the lens in the normal way, but to its posterior surface. He had examined microscopically eyes with a somewhat similar congenital malformation, and speaking from what he had found in them he would judge that in this case there was behind the lens a fibrous membrane, due to atypical development of the anterior part of the vitreous humour, to which the ciliary processes on the inner side were connected. The union of the ciliary processes in fœtal life with this membrane,

instead of with the side of the lens, would have prevented the inner part of the suspensory ligament from developing, while it would have formed in the normal way elsewhere; consequently, as the eyeball enlarged, the lens having nothing to hold it on the inner side became drawn outwards.

Mr. John Griffith said that if such a membrane existed, it must be either inflammatory or the remains of the hyaloid artery in the vitreous chamber.

---

6. *A case of coloboma of the lens.*

By Adolph Bronner, M.D. (Bradford).

In this case there was a coloboma of the lens upwards and outwards. The iris was narrow over the coloboma, and atrophied. There was an irregular opening in the iris near the pupillary margin. The iris was also tremulous in this region. The colour of the iris was not altered, and there were no synechiæ. The pigment at the pupillary margin over the coloboma was absent, and it was irregular over the edges of the coloboma. The lens and other parts were otherwise perfectly normal. The suspensory ligament was evidently absent at the coloboma. There was no history of a trauma or inflammation. There was well-marked myopia (7 D.), with 3 D. of astigmatism.

Dr. Bronner thought that the changes were congenital, probably due to some intra-uterine inflammation, and not a malformation in the strict sense of the word.

(*Card specimen. December 10th,* 1896.)

Mr. Anderson Critchett said he recently had under his care at St. Mary's Hospital a case of double congenital coloboma of the iris, double dislocation of the lens,

and a coloboma of one lens; the latter was shrivelled, and the movements of the globe threw it from side to side. Had the patient lived in London he would have shown her to the Society.

XI. MISCELLANEOUS.

1. *Central amblyopia as an early symptom in tumour at the chiasma.*

By E. Nettleship.

I have seen about ten cases in which failure of vision at or close to the centre of the field in both eyes, with little or no early ophthalmoscopic change, occurred in women. Three of them turned out to be cases of ordinary toxic (tobacco) amblyopia, and in one it seemed probable that alcohol alone was the cause.

Some seven cases remain in which there was no reason whatever for entertaining the suspicion of a toxic cause, and in which later events made it extremely probable that some coarse intra-cranial disease had caused the visual failure. Four of these patients have died with cerebral symptoms, and in the only one where a post-mortem was obtained a cystic tumour was found involving the chiasma, optic tracts, and other parts at the base.

It is probably only by accident that six of the seven cases have been in women. The sixth, a very similar one (Case 6), occurring in a man, was brought to me by Mr. Stanford Morton; and it is possible that some cases in men may have been looked upon as examples of tobacco amblyopia at first, and subsequently lost sight of.

It is to be observed that in the earlier stages the loss of field was usually somewhat more abruptly defined but less constant in position than in tobacco neuritis, and that the symmetry was less precise, either in time or in degree, than in that disease. But the resemblances

between the two groups are close enough to demand much care in diagnosis.

In the later periods, more or less mental failure has occurred in several of the patients, taking the form, usually, of marked loss of memory and irritability, alternating with depression and inertness. Headache, usually frontal, has been troublesome at times in several instances, but on the whole has not been a conspicuous symptom. Varying paralysis of one or other of the oculo-motor nerves occurred at some period in three of the cases.

The changes at the discs were doubtful, or at most amounted only to pallor of the outer half, until quite late in the case, when appearances of more complete atrophy sometimes occurred. In Case 5, retinal hæmorrhages and some œdema occurred, but only in one eye, and not until the case was far advanced; in none of the others has there been anything that could be called papillitis.

If a case such as we are now considering be first seen at an *advanced* stage, the visual defect will sometimes, perhaps always, have the form of a more or less correct temporal hemianopia, and there will probably be other symptoms pointing to intra-cranial disease. But seen in the earliest stage, when the failure of central vision is the most conspicuous symptom, the differential diagnosis from tobacco amblyopia may, as already stated, be difficult.

Bi-temporal hemianopia is known to be the result of disease, such as tumour, involving the anterior part of the chiasma, where the fibres from the nasal half of each retina cross to the opposite optic tract. That disease in that situation should ever be so finely localised as to involve at first, and even for a considerable period, only or chiefly the fibres from close to the central part of each retina does not at first sight seem probable, but that it may do so cannot be doubted.

Förster as long ago as 1876 * had observed cases in which a small negative scotoma, beginning just outside

* Förster, 'Graefe-Saemisch Handbuch,' vii, 116.

the fixation point, gradually extended, and finally included the entire temporal half of the field. He states, but whether as the result of post-mortem verification or not does not appear, that such an occurrence is "explained by a disease of the chiasma which, starting from the *recessus opticus*, first attacks the papillo-macular bundles and afterwards the remaining crossed bundles." Förster's statement does not seem to have attracted attention, and the only published cases of the same class that I have found is one by Treitel (quoted by Willbrand),* in which nothing is said of post-mortem examination; and one by Mr. Doyne, probably of the same class, in our 'Transactions' for 1895 (vol. xv, p. 133). In Treitel's case there was a large defect in the temporal half of the R. field of vision, and in the L. field a large conical scotoma, extending from the fixation point into the upper temporal quadrant, and not reaching quite to the periphery. For proof of the situation of the macular (or approximately macular) nerve-fibres in the chiasma, we have Vossius's statement that these fibres lie in the upper (presumably anterior) dorsal part of the chiasma;† and Bunge tells us that his observations agree on this point with those of Vossius.‡

It is well known that the nerve-fibres from the yellow-spot area fill a larger part of the optic nerve than the small retinal area to which they belong would lead us to expect; and their relative bulk in the chiasma is probably not less than in the optic nerves. Thus the difficulty of supposing them to be picked out by a pressure lesion at the anterior angle of the chiasma is less than might be supposed. Furthermore, interference with the function of these fibres in any part of their course produces very marked visual symptoms. On reflection, therefore, it need not be a matter for great surprise that disease

* Willbrand, 'Hemianopsie,' p. 43, 1881, quoting Treitel, 'Arch. f. Ophtalm.,' xxv, 3, 67.

† Vossius, 'Arch. f. Ophtalm.,' xxviii, 3, 18.

‡ Bunge, 'Ueber Gesichtfeld,' p. 19.

beginning towards the front of the chiasma should sometimes first make itself known by a defect at the centre of the field of vision.

Case 1 (P. 13—52).—Mrs. B—, æt. 64. The notes are incomplete. She came to me in July, 1886. The sight had been going for about four months, and she thought that the worry of her late husband's illness had caused the failure. She was a stout, florid woman, looking younger than her years, and had got stouter lately. Vision with both eyes together was only $\frac{6}{60}$, with + 1·5 D. There was some painless episcleritis in the lower outer quadrant of the L. eye, but this had no bearing on the visual failure. The ophthalmoscopic appearances were negative. By using coloured spots the defect of vision was found to be chiefly or entirely in the centre of the field in each eye. Urine sp. gr. 1010; no albumen; a small but characteristic precipitate with Fehling's solution. I was puzzled by the case, and told the patient that if she had been a man I should have asked whether she smoked; she did not smoke. I wrote in the same sense to her son, who is a medical man.

A month later sight was in about the same state, barely $\frac{6}{60}$ with + 1·5 D., and 16 J. with + 5 D.

I did not see her again, but she died a few weeks later unexpectedly with cerebral symptoms; she was away from her son at the time, and I have no further particulars.

Case 2 (P. 31—160).—Mrs. L—, æt. 40, was sent by Dr. Buckley, of Thrapstone, and was also for a time under the care of Dr. Hinde, of Sawbridgeworth, to both of whom, as well as to Dr. Sharkey, Mr. Lawford, and Mr. Herbert Fisher, I am indebted for notes. She has had five children, all living and well, the youngest aged five years; the catamenia have not reappeared since she suckled the last child.

Mrs. L— came to me first on July 20th, 1894, very frightened because she had been told she had cataract. She had used glasses for two or three years, and quite

lately had got spectacles of + 3 D., but was dissatisfied with them. I found a small opacity at the posterior pole of the R. lens, but nothing amiss with the L. lens; and with undilated pupils I could find no changes at the fundus of either eye.

Vision of the right $\frac{6}{60}$; Hm. 3 D. $\frac{6}{36}$.

Vision of the left, $\frac{6}{24}$ or $\frac{6}{18}$; Hm. 2 D. $\frac{6}{18}$.

Finally, with both together, with + 2 D. she saw $\frac{6}{9}$.

For reading she preferred + 4·5 D.

She could not or would not let me complete the examination that day, and as I did not examine the fields I put down much of her difficulty to fright. She had had influenza slightly early in the year. She was a teetotaler. I asked her to come again in three weeks, and on August 13th was able to examine better. Vision with both eyes together was $\frac{6}{18}$ or $\frac{6}{12}$ with + 2 D., and with + 5 to 7 D. she read about J. 6 slowly. With coloured spots a very large scotoma was now found, extending from a point just to the temporal side of the centre horizontally outwards in the left eye, outwards and downwards in the right. The blindness seemed to be absolute over the part of the scotoma between the fixation point and the normal blind spot, but not so over the more temporal portion; and there was a narrow zone of colour perception beyond the defective area at the temporal side. Though this defect in the fields was suggestive of a toxic neuritis, the large portion that was entirely blind, and the relatively slight affection of the actual centre of the F. in each eye, were points of difference from ordinary tobacco amblyopia. In reply to questions she denied ever having smoked. After dilating the pupils I could find no changes in either eye, except the opacity in the R. lens already mentioned; the discs looked perfectly healthy.

In October the L. third nerve became completely paralysed in all its branches, with pain, and Mr. Lawford saw her with this condition whilst I was away. Dr. Buckley now told us that there was no reason to suspect syphilis.

She came again on January 10th, 1895. The left ptosis had disappeared, but the other muscles supplied by the third nerve was still almost powerless and the pupil still enlarged. Vision was about the same: R. Hm. 2 D. $\frac{6}{24}$, L. Hm. 2 D. $\frac{6}{18}$, but only letter by letter and for a short time. She complained of want of endurance of sight in both eyes. Each optic disc was now very pale on the temporal side, and somewhat so on the nasal side. The left-sided headache had troubled her a good deal since October, and she said she had been "very ill" when staying with friends five weeks ago, as follows:— After a period of worse than usual pain over the left forehead and down the left side and root of nose, she began suddenly to discharge offensive slimy matter from her throat by the mouth. This lasted for some days, and the headache was much better as soon as the discharge began. Dr. Hinde wrote to me that he was for a time uncertain about the nature of this attack, but that on the whole he concluded it to be due to stomatitis. Thinking it possible that the whole case was essentially one of disease of the sphenoidal sinuses, I took her into St. Thomas's Hospital for a short time. On January 18th Mr. Herbert Fisher measured the fields on the perimeter, and found a condition of temporal hemianopia, with contraction of the remaining nasal part in each eye, the whole loss of F. being rather greater in the L. than in the R. (Figs. 43, 44.) At this date vision was decidedly worse than when I saw her in July and August, viz.:

R. Hm. 2 D. $\frac{6}{24}$ partly,
L. Hm. 2 D. $\frac{6}{18}$ partly, } and reads only words of 14 J.,

but the left third nerve had almost recovered, only a little defect of movement inwards and upwards remaining. Dr. Sharkey, who was now kind enough to see her, thought it probable she had a tumour of the pituitary body. No new symptoms occurred, and she stayed in hospital only a few days. I have not seen her since, but Dr. Buckley reported, on January 14th of the present year (1896), as follows:

FIG. 43.

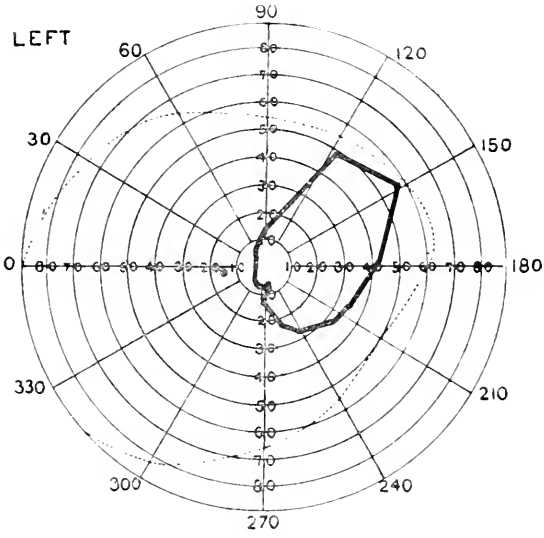

FIG. 44.

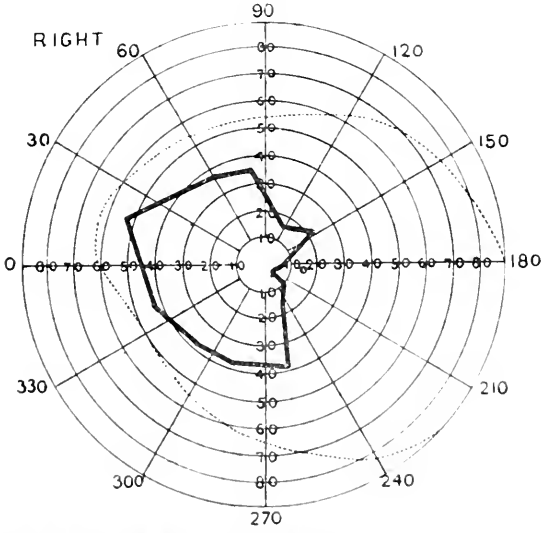

FIGS. 43 and 44.—Mrs. L—, January 18th, 1895. 20 mm. test.
(From charts taken by Mr. Herbert Fisher.)

"R. quite blind, and almost complete paralysis of third nerve.

"L. can see the hand held in good light. No trace of ocular paralysis.

"Is more cheerful than she was, and now seldom has the severe headaches; but is inclined to sleep more than formerly, and does so in the daytime."

In March, 1896, he reported that she had just had influenza again badly, and "for a week her mind was an absolute blank," but that she recovered to her previous condition.

On October 12th, 1896, Dr. Buckley writes that she now has only the barest perception of strong light, and that "since March there is increasing loss of memory;" and that she still at times has pain behind both eyes and at the back of the neck.

On April, 1897, the report is that her memory is worse. Sometimes she cannot remember what day it is or the name of her doctor; at times she drags one foot in walking.

In July, 1897, I examined her again and noted: "She has had no p. l. in either eye for about a year. Both O. Ds. very pale all over; vessels normal. There is partial paralysis of L. third nerve. She still has pain on top of head, and is weak on her legs. Her memory is very bad, and this makes her seem childish."

Case 3 (P. 36—12).—For the notes and field charts of this case I am much indebted to Mr. Brittin Archer, who had watched the patient's progress for a year and a half before I saw her.

Mrs. N— had glasses ordered by Mr. Archer for presbyopia in 1886, when she was forty-six, vision being then full in each eye.

On February 13th, 1894, when fifty-four, she applied to Mr. Archer again, complaining of her sight.

"Vision of R. was $\frac{6}{12}$, not improved by glasses; L. was $\frac{6}{9}$.

"Some faint striæ in both lenses, and fine opacities in the vitreous of the R. O. Ds. normal. Fs. of full

size, but there was a doubtful small central scotoma. Pupils act well. State of vision probably due to lens and vitreous changes.

"Personal history negative; had had no children.

"Father died of 'paralysis,' with shaking hands and head. A brother who had lived very freely died insane at the age of thirty-four, after being for three years in an asylum. Patient's life is unhappy owing to domestic troubles. Ordered iodide of potassium.

"April 14th.—No change in sight or state of media. Patient suspected of being alcoholic.

"July 21st.—Vision much worse, though the R. vitreous has cleared, and the lenticular changes have not increased. R. $\frac{6}{24}$; L. $\frac{6}{36}$. Fields of full size, but in each field a large scotoma involving the centre and passing in the L. straight outwards; in R. upwards and outwards to about 45° from centre; the central part is absolute in each eye, the remainder relative (Figs. 45, 46). O. Ds. and rest of fundus normal. Pupils act to light and accommodation. Probably retro-bulbar mischief, ? toxic. Alcoholism still suspected. Knee-jerks very sluggish. Sent to Buxton for a course of baths and treatment.

"September 10th.—Feels very weak from the treatment at Buxton. Sight worse. R. $\frac{6}{24}$; L. fingers at 4 inches. Scotomata larger and Fs. contracting peripherally. O. Ds. still look healthy. Knee-jerks absent. Has pains in back and limbs when in bed.

"November 22nd, 1894.—R. still $\frac{6}{24}$; L. fingers at 1 m. in nasal part of F. Fs. much altered (Figs. 47, 48). O. Ds. are somewhat pale, but L. not much paler than R. Patient's manner much altered, otherwise no fresh symptoms."

The above are Mr. Archer's notes.

In the early part of 1895, Mrs. N— had advice from Mr. Bullar, of Southampton, and others. Mr. Bullar's notes, kindly supplied, showed vision to have remained the same till about the end of April. He found her urine normal.

FIG. 45.

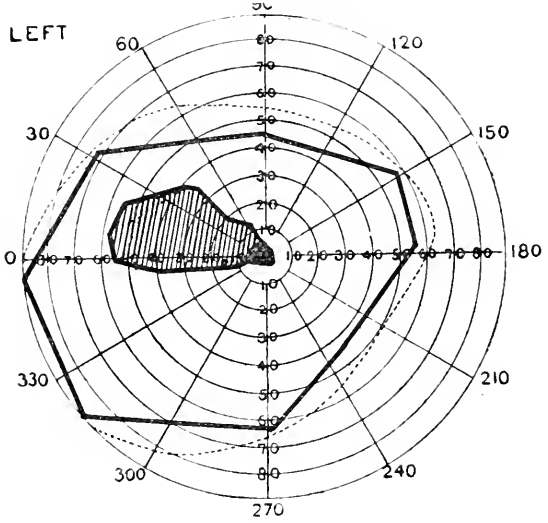

FIG. 46.

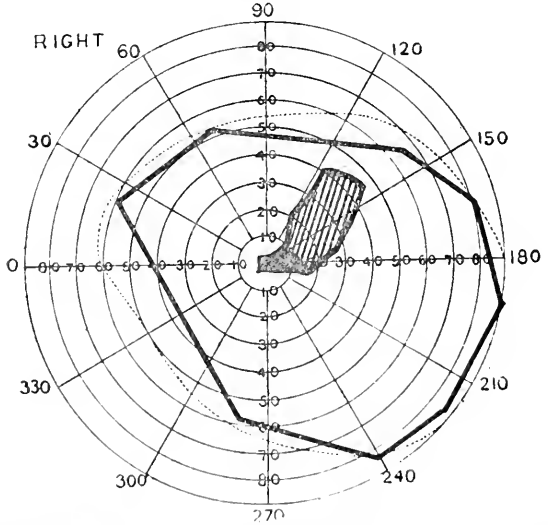

FIGS. 45 and 46.—Mrs. N—, July 21st, 1894. Black part = absolute scotoma; shaded part = relative scotoma.
(From charts taken by Mr. Brittin Archer.)

FIG. 47.

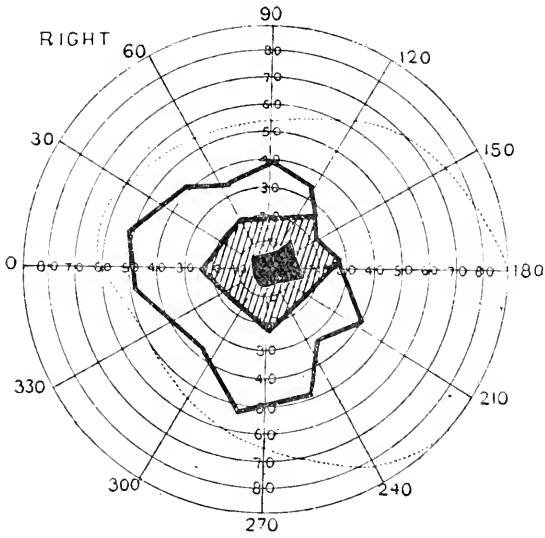

FIG. 48.

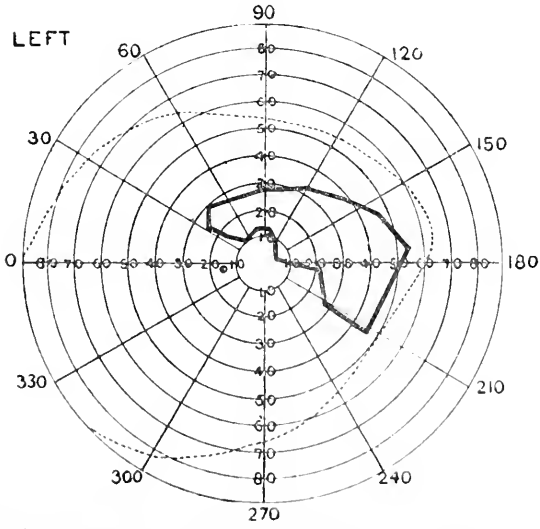

FIGS. 47 and 48.—Mrs. N—, November 22nd, 1894.—Black part = absolute scotoma; shaded part = relative scotoma.
(From charts taken by Mr. Brittin Archer.)

She came to me on October 24th, 1895, the sight being then much worse, the R. (or better) eye now seeing barely words of 16 or 18 J. The R. pupil acted well to light; the L. had only consensual action. The R. O. D. was slightly pale, the L. very pale all over, the arteries showing thickened translucent coats and compressing the veins. Knee-jerks full and easily obtained, but not excessive.

The friend who came with her said Mrs. N— had always been irritable, but her manner had lately altered much, and she seemed to be getting quite childish. The friend suspected that she drank, but she could not be certain.

A month later, on November 23rd, the patient was found dead on the floor of her bedroom in the morning; she had not been so well as usual for a few days before, and had had much headache for a day or two. An inquest was held, but no post-mortem examination made.

Case 4. (P. 36—27).—Mrs. A—, a feeble old lady upwards of 70, came in October, 1895.

Her L. eye had been failing for a year and was almost useless; by looking a little upwards she could see fingers at 12 inches, but could not see the hand at all at the centre of the field; vision at the periphery of the field, though apparently lowered, was not lost anywhere. O. D. yellowish and slightly cupped (atrophic cup), media clear. Pupil motionless to direct light. T. n.

The R. was also failing, and had been, she thought, much worse the last two weeks. V. $\frac{6}{24}$, not improved; with + 3·5 to + 5 D. reads up to 6 J., but cannot read that, or even much larger, type well. Field of full size to hand test, but there is a dense central scotoma for red and green, extending to about 10° or more from the centre; at and near the centre the defect is such that she cannot see the colour of the red spot at all, but it becomes suddenly "quite red" on passing a certain point in each direction. P. and T. quite n. After

dilating the pupil no changes were discoverable except a slight nuclear blur of the lens.

She was thin, pale, feeble, liable to syncopic attacks, and had been a teetotaler all her life. I advised some alcohol and strychnia.

On January 9th, 1896, she was much stronger and better in health, and sight in the R. (or better) eye was not worse. I thought the disc rather too pale on the temporal side ; but the change, if any, was insignificant in degree.

On October 8th, 1896, her husband writes from Devonshire : "The L. eye is entirely useless, the R. is very dim."

Case 5. (P. 32—91).—Mrs. B—. In this case, after an obscure illness lasting from two to three years the patient died, and a large cyst was found at the base of the brain.

The patient, a married lady, began to complain of her sight during the suckling of her fourth baby, which was born in March, 1893, when the patient was just thirty-eight. Her first complaint was of a "black spot" before the L. eye, but she soon began to complain of the R. also.

In December, 1893, though she had a "misty appearance" directly in front of her and everything seemed "blurred," two well-known ophthalmic surgeons found that vision in daylight was with each eye $\frac{6}{12}$, raised to $\frac{6}{5}$ by correcting her slight myopic astigmatism, and were unable to find any morbid changes in the eyes. She continued, however, to say that her sight was failing, but no further record of vision was made for nearly a year. When I saw her on October 26th and November 1st, 1894, her age then being thirty-nine and a half, I found as follows :

R. V. $\frac{6}{60}$; L. V. less than $\frac{6}{60}$. Glasses not tried. Myopia estimated about 1 D. With both together could read about J. 8 held close to her eyes. In each field a

scotoma of oval shape in the temporal part, beginning just external to the fixation point and measuring about 20° across (Figs. 49, 50). Much of the scotoma in each was absolute ; no peripheral loss of field. I thought both discs rather pale on the yellow-spot side. Pupils were noted as acting with accommodation but not to light, but this was probably incorrect, as at later visits they acted more or less to light. Knee-jerks normal; urine and organs healthy. Was depressed, nervous, and irritable, fearing blindness. A history of frontal headaches for some months, but no sickness. Had never smoked. No reason for suspecting syphilis.

The last (fourth) child came about eight years after the third, the three eldest being eighteen, fourteen, and ten. Had lived some years in India, but was in England during most of the fourth pregnancy (1892–3), when she suffered much from the cold winter and became subject to periods of great mental depression. Soon after the confinement, *i. e.* about when she began to complain of her L. eye, her friends noticed a marked forgetfulness of recent events and a tendency to fall asleep in the day-time, even when at meals or talking to friends. There was a history of sudden unconsciousness lasting an hour, after a brief exposure to the sun in India about twelve years before (May, 1882). In other respects her history was good, and the rather vague symptoms just mentioned, including the failure of sight, had been looked upon as probably due to lowering of energy from pregnancy, lactation, and cold climate.

The peculiar condition of the fields of vision, however, and the imperfect action of the pupils, could not be accounted for in this way. The absence of a toxic cause for the amblyopia, and its apparently steady progress, seemed to me to point to organic disease; and that the amblyopia had lasted long and reached a high degree without causing unequivocal changes at the discs, seemed in favour of the disease being high up in the visual path. I therefore asked for Dr. Sharkey's opinion. Dr. Sharkey

Fig. 49.

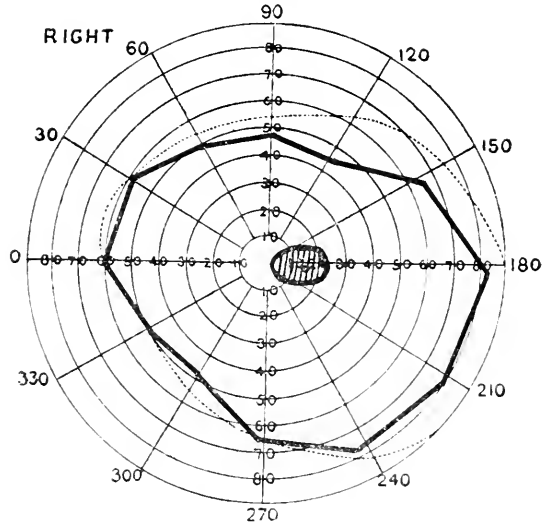

Fig. 50.

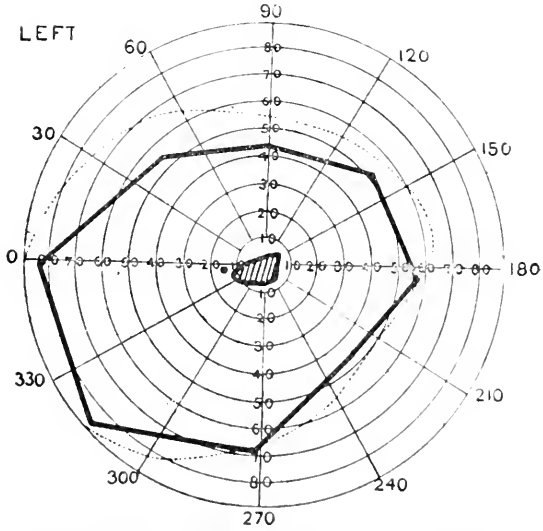

Figs. 49 and 50.—Mrs. B—, November 1st, 1894.

observed, in addition to the eye symptoms, some lowering of sensation of the left half of the body, some feebleness of the muscles of the same side, a somewhat increased left knee-jerk, and slight drooping of the left upper lid.* He added, "All this one is familiar with in functional nerve disease. But her headaches, loss of memory, and mental inertness are less common under those conditions, though I do not think they would of themselves prove gross disease;" but in connection with the visual failure he thought the other symptoms pointed to the probability of tumour. He suggested strychnia subcutaneously, and its use for two or three months was followed by improvement of the general condition.

About a month later (December) she complained for some days of noises in her L. ear, but there was no appreciable deafness. She also said, about this date, that smell and taste were defective, but no precise tests seem to have been used.

She was now so forgetful that in writing to her husband she would sometimes repeat the same sentence or message two or three times in the same letter.

In January, 1895, I found the sight was no worse, and noted the pupils as normal. No exact tests of vision were applied after that date, but as late as July, 1895, she could still read ordinary type with an effort when her attention was roused. During this year (1895) the patient's mental torpor steadily increased, her muscular strength failed, and towards the end of the year her mental faculties were in almost complete abeyance. She lost control of the sphincters, including the mouth, and lay in bed seldom speaking, although when roused she could recognise friends and would, to a certain extent, do as she was told. The dribbling of saliva was accompanied by a permanent rigidity of the lower jaw and by difficulty, or unwillingness, in swallowing. Then permanent rigid flexion of the right thigh and leg came on, and a similar state of the middle finger of each hand,

* The lid-drooping seems to have been only temporary.

first of the left hand, then of the right. Extension of the flexed limbs caused pain. The flexion of the fingers was for a time accompanied by some swelling of the hands, which was not accounted for. There was some wasting of the left leg, its calf measuring half an inch less than the right. During this year (1895) she was repeatedly seen by Dr. Savage and other physicians, but as between hysteria, dementia, and organic disease of brain no conclusion was arrived at.

On December 21st, 1895, and January 26th, 1896, I was allowed to examine her eyes again, and found in the right eye a number of hæmorrhages, mostly rather large, at and about the disc; the disc was not more hazy than slight œdema would account for. In the L. there were no hæmorrhages, and the disc was now decidedly though not extremely pale, but not suggestive of previous papillitis. She was much too torpid to allow any testing of sight, but it was evident that she readily saw the things and people about her when both eyes were open. The pupils acted a little, but sluggishly to light.

On March 13th her husband thought she was not seeing so well as before.

She continued to sink slowly, becoming very thin, and died on June 24th last (1896), with symptoms of commencing pneumonia of right lung. I believe she spoke only such words as "yes" and "no," and then only when roused, for many months before death. An ophthalmoscopic examination was made under atropine on the 16th (eight days before death); the R. disc was swollen and ill-defined, the veins large, and hæmorrhages still present; the L. disc was just as it had been before.

I am indebted to Mr. G. E. Mould and Dr. C. T. Evans for the following account of the post-mortem examination.

Body of middle-aged woman presenting considerable muscular wasting, but no loss of adipose tissue. Right knee rigidly flexed. Right upper arm and shoulder noticeably larger than the left. No bedsores. The organs with the exception of the brain were healthy.

Head.—On removing the vault of the skull the membranes were non-adherent, opaque, and anæmic; it was noticed that there was marked flattening of the brain in

Fig. 51. (Diagrammatic.)

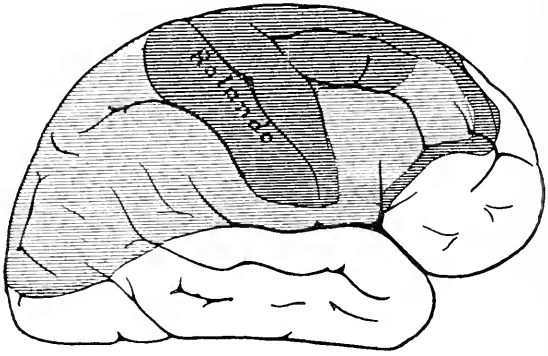

Fig. 52. (Half diagrammatic.)

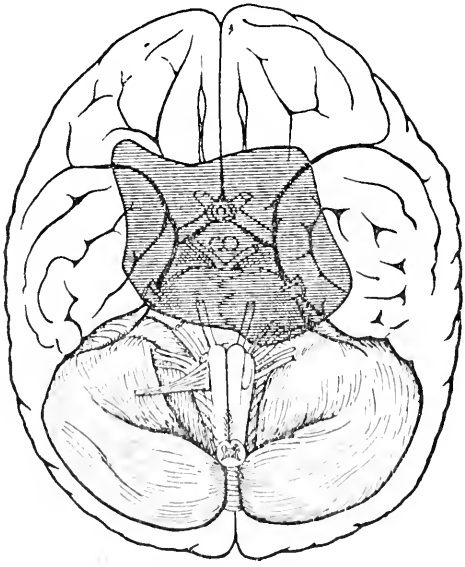

the fronto-parietal and parieto-occipital region on both sides (Fig. 51).

On reflecting the dura mater entire absence of fluid was noted, and the non-flattened parts of the brain

FIG. 53. (Diagrammatic.)

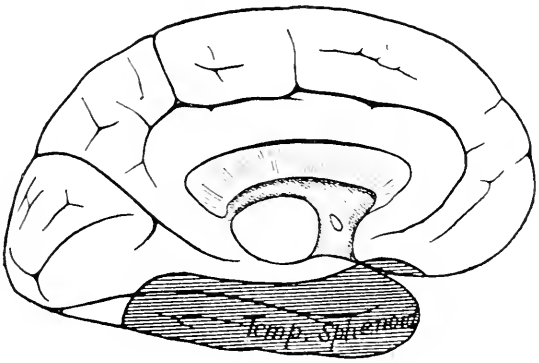

bulged through the membranes ; veins and sinuses were empty. The convolutions were flattened in the above-named areas, especially the superior, middle, and ascending frontal and ascending parietal.

On raising the brain a large membranous sac distended with fluid was seen lying on the sella turcica, extending to the great wings of the sphenoid and the crista galli, and lying on the cribriform plate of the ethmoid. These bony structures were extensively eroded by dry caries.

The cyst being thin and the fluid beginning to escape, the contents were drawn off with a syringe and found to consist of a straw-coloured turbid fluid to the approximate amount of 6 ounces, leaving behind a gritty, sawdust-like sediment.

The fluid removed from the cyst was alkaline with a specific gravity of 1025 ; it contained no reducing agent. After being filtered it was found to contain 8 per cent. of albumen and abundance of chlorides. The microscope showed that crystals of cholesterine composed the greater

part of the sawdust-like sediment, but there were also numerous cells undergoing fatty degeneration, pus cells, and blood-corpuscles.

On slicing the brain there seemed to be no connection between the cyst and the brain substance, and the latter appeared quite normal. Weight 45½ ounces.

Backs of eyes removed with optic nerves. In the R. numerous small hæmorrhages were found in the retina, and the edges of the disc were indistinct and raised. No hæmorrhages in the L. retina.

Relation of cyst to brain (Figs. 52, 53).—Mr. C. D. Marshall found that the wall of the cyst "was loosely attached to the hinder part of the frontal lobes, to the median part of the temporo-sphenoidal lobes, and to the hook of the uncinate convolutions; it reached back as far as the middle of the pons, apparently rather further on the left side than on the right, and it (the pons) was deeply indented on this side as the result of the pressure. The chiasma is incorporated in the front wall of the cyst. The vessels and nerves either formed part of the cyst wall or lay outside it. The cyst wall, nowhere thick, was thinner in some parts than others. It was not adherent except at one place, viz. to the hinder part of the right frontal lobe, where the brain substance broke on pulling it away.

"The R. optic tract is well seen, and can be traced back to the pulvinar. The commissural fibres can be followed round a short distance towards the other side, so also can the fibres which pass into the cerebrum. On the L. side no trace of the tract can be found. It is apparently so flattened as to be unrecognisable."

Mr. Marshall cut and examined the optic nerves, and has been kind enough to send me the following report.

"*Right optic nerve.*—On examination of cross sections it is seen that the nerve shows somewhat unequal degeneration. Towards one side of it there is more sclerosis, the connective-tissue trabeculæ are thicker, and

the bundles which once contained nerve-fibres are smaller and more shrunken than on the other side. The more advanced changes of this sort occur near the centre of the nerve, while towards the periphery on the same side they are less marked. On examining these bundles with a high power nothing like healthy nerve-fibres can be seen; the fibres give the appearance of being composed entirely of delicate connective tissue, which forms a dense network with a few nuclei. On the side opposite to this the sclerosis is less marked, the connective tissue which separates the various bundles is less dense, and the bundles themselves are not so shrunken; indeed, at some places it almost looks as if nerve-fibres were present. These distinctions are well seen in the sections taken from the nerve near the eyeball and in the middle of its course, but on tracing it further back towards the brain the characteristics noted above are not nearly so well marked, and the sections have a more uniformly degenerated appearance; but even here towards the periphery on one side some few of the bundles have a less shrunken appearance. The disc is swollen, and has the appearance of having been more so than it is now. There is considerable proliferation of cells, and a good deal of round-cell infiltration.

"*Left optic nerve.*—This shows more extensive changes than the right, and these are well marked in the disc, which is not at all swollen. No healthy nerve-fibres are visible, though there is nothing like an "atrophic cup." The cross sections of the optic nerve show very extensive changes; the sclerosis is more marked than in the right nerve, and the connective-tissue trabeculæ appear to be rather more highly developed. The bundles contained within these are much shrunken, and are all in about the same condition. At one part near the periphery, however, some of the bundles do not look quite so shrunken, but on examining even these with a high power it is impossible to see any nerve-fibres; they seem to consist only of connective tissue. These slight differences are

seen in the sections nearest the eyeball ; the remaining part of the nerve seems to be almost uniformly atrophied."

Case 6 (P. 30—192).—Rev. Wm. G—, æt. 65, consulted Mr. Stanford Morton about May, 1893, on account of difficulty in seeing the middle letters of long words. He said that this difficulty was only noticeable when both eyes were open ; with either eye singly he could see the whole word. Mr. Morton found slight paresis of the L. external rectus, and V. of R. $\frac{6}{12}$; Hm. 1 D. $\frac{6}{6}$ partly ; L. $\frac{6}{36}$; Hm. ·75 D. $\frac{6}{12}$ partly. There was pallor of the y. s. side of each O. D., and some opacities in each lens.

Mr. Morton failed to detect any central scotoma in either eye, but found slight peripheral loss in the L. field.

V. of the L. became worse and the external rectus more paralysed, and he then complained of difficulty in reading with the R. because the letters to his R. looked indistinct and he missed them. He could, however, still see $\frac{6}{6}$ and read J. 1.

In May, 1894 (æt. 66), Mr. Morton brought him for consultation. The L. external rectus was then completely paralysed, and V. of the L. eye reduced to hand movements, which he could see in all parts of the field. With the R. he could still see $\frac{6}{9}$ but not $\frac{6}{6}$, and could read well with his glasses ; but when tested with a small spot (2 mm.) of red or green, a relative scotoma was found just downwards and outwards of the fixation point, and at one minute spot the blindness seemed to be absolute. The field otherwise was full.

The pupils were normal. The L. O. D. (the worse eye) pale all over, but much more so on the y. s. side. In the R. the pallor was confined to the y. s. side, and was very marked there. Mr. G— had never smoked since he left college. Suspecting that there might be disease about the chiasma we tested his smell with iodoform repeatedly for each nostril, and found it quite good.

Subsequently the R. eye also became very nearly blind, and towards the end of 1895 the patient died after

a few days' illness accompanied by "cramps or spasms of the legs and some cerebral symptoms." There was no post-mortem examination.

Case 7.—Mrs. T—, æt. 38 (P. 39—141) has only been under observation since last August, and I reserve full details till a later date. At present (August, 1896) there is a very well marked scotoma, just outside the fixation point in each eye, larger and denser in the L. eye, with absence or defect of the knee-jerks, and insomnia. She does not smoke.

(*October* 15*th*, 1896.)

(I have not been able to learn anything of the progress of Case 7—May, 1897.—E. N.)

Mr. Berry said the subject was a very large one, and it opened up the whole question of central amblyopia, which was too extensive to be dealt with so late in the evening. There was a natural suspicion that the cause, in cases presenting such atypical scotomata, was something other than a toxic one. He had not seen cases of distinctively central amblyopia followed by temporal hemianopia, though probably some of the cases he had observed had gone that way, but he had not followed them out so thoroughly as Mr. Nettleship had followed his. It had interested him to hear the President refer casually to "tobacco neuritis." This point as to whether tobacco amblyopia was or was not due to neuritis was the crux of the whole question. He maintained that they were not, whereas other forms of central amblyopia, such as had been just described, were undoubtedly caused by neuritis or atrophy.

2. *Some cases of sympathetic ophthalmitis.*

By F. R. Cross.

The operation devised by Mules of eviscerating the sclerotic and introducing an artificial vitreous undoubtedly gives a far better stump for the glass eye than enucleation does; the glass eye stands forward more prominently, leaves less sinking under the upper lid, and moves more naturally and freely. Recovery after Mules' operation is sometimes tedious, the artificial vitreous may be expelled after suppuration, or a fistulous opening may remain that cannot be altogether devoid of risk.

I reported ten years ago to this Society a series of cases in which I had performed Mules' operation in place of enucleation. In two of them sympathetic inflammation of a mild type had occurred, seventeen and twenty-one days respectively after the operation on the damaged eye had been performed.

I wish now to record a more serious case of sympathetic ophthalmitis in a boy of fifteen. E. D— came to the Bristol Eye Hospital, July 14th, 1896. His left eye had been struck by a stick three weeks previously. There was a perforating wound in the outer sclero-corneal margin with incarcerated iris, hyphæma, and traumatic cataract. V. barely p. l. The right eye was well. V. $\frac{5}{5}$ J. 1; pupil active, no pain, media and fundus normal.

The left eye was eviscerated on the day of admission, and a small glass vitreous introduced. Considerable chemosis and œdema followed; on the fourth day a few conjunctival punctures were made, after which recovery was satisfactory. The patient was discharged from the hospital on July 23rd, fourteen days after the operation, apparently quite well.

On August 18th he returned with irido-cyclitis in the right eye, ciliary and conjunctival injection, discoloured iris,

small sluggish pupil, posterior synechiæ, hazy media, photophobia and lacrymation. Tension normal; V. $\frac{5}{60}$, J. 10.

The boy said that the right eye became uncomfortable a day or two after he went from the hospital, and the sight soon became hazy. The stump of the eviscerated eyeball was enucleated at once by Dr. Hailes. Atropine was applied to the right eye, but was altered a few days later for scopolamine; a dark bandage was applied. The eye gradually improved, varying from day to day with more or less discomfort and ciliary congestion. The pupil was not well dilated till October 6th, showing a good deal of uveal deposit on the periphery of the lens, as if from the posterior surface of the iris as well as from the pupil. On October 20th the mydriatic was stopped, but iritis at once supervened. Atropine or scopolamine was continued. The eye was kept bandaged from light until January, when all seemed quiet, and the pupil was well open and almost cleared of uvea. In February the vision was $\frac{5}{6}$, the eye still somewhat irritable.

The boy was retained in the hospital till March 22nd, seven months after the removal of the eviscerated stump. Had he been exposed to glare and draughts, I believe the sympathising eye would have been lost.

On May 11th we carefully examined the eye, which seemed perfectly recovered with good pupil action. Fundus and media normal except for slight choroidal changes, possibly physiological, around the disc. V. $\frac{5}{5}$, J. 1.

Evisceration had been done three weeks after the injury, when the fellow eye seemed perfectly well. Three weeks after this, despite the operation, sympathetic inflammation came on of a very definite and severe type, and subsided only after seven months' constant care in hospital. I believe in this case (as in my two earlier ones), that enucleation of the eye originally injured would have been a safer procedure against sympathetic inflammation.

Many cases have been published where sympathetic

inflammation has set in after excision of the exciting eye; and this complication appears to be entirely due to the condition of the injured eye and not to the operation for its removal. A radical removal of the whole organ would seem to be a safer preventive than the most thorough cleansing out of the scleral contents, however closely sympathetic ophthalmitis may depend on septic uveitis, for evisceration still leaves the veins and lymph-channels in and outside the sclerotic as a possible source of infection.

An examination of my notes shows one case only of typical sympathetic inflammation setting in after excision of the exciting eye.*

I am under the impression, however, that we occasionally see a destructive form of irido-cyclitis appear in the remaining eye a long time after its fellow has been enucleated for inflammation after injury, a condition that can hardly be distinguished from a sympathetic inflammation, unless by the interval that has occurred between the removal of the one and the onset of inflammation in the other eye.

Thus I recently had under observation H. W—, a man whose right eye was lost from what appeared to be a typical sympathetic inflammation. His left eye had been injured, and was removed within a week of the accident. His right eye seemed to keep well until exposure to the electric light nine months after the accident. About this time I first saw him, suffering in his remaining eye from iritis, posterior synechiæ, keratitis punctata, and lymph in the anterior chamber, subacute circumcorneal congestion, —a picture, as it seemed to me, of sympathetic mischief. He was under the care of a colleague for some time in hospital, and improved; but the inflammation continued to recur, and the sight gradually failed. Eighteen months after the accident to the first eye he came under my care with a degenerating eyeball, apparently in the last stage of sympathetic ophthalmitis.

A. T—, æt. 45, was admitted into the Bristol Eye

* 'Trans. Ophth. Soc.,' vol. vii, p. 155.

Hospital with irido-cyclitis of the right eye ; V. $\frac{3}{60}$, J. 20. He told us that seven months previously his left eye had been injured by some steel fragments, which were at once removed, and this eyeball was enucleated one month afterwards. The right eye was said to have been weak and irritable at this time, without any definite symptoms, but it soon became quite strong. Five months after the accident the eye seemed to have "caught a cold," the sight began to fail, and for the past seven weeks the patient had been unable to work. I found iritis with keratitis punctata, and a definite lymph mass in the pupil. The appearances were suggestive of sympathetic disease—no mydriatic had been applied. Energetic use of atropine opened the pupil for one fifth of its diameter down and in. The man remained in hospital a month under a dark bandage, mydriatics, and mercury. On his discharge the eye was hardly inflamed. V. $\bar{c} - 1{\cdot}5 = \frac{6}{36}$. A month later V. $\bar{c} - 1{\cdot}5 = \frac{6}{60}$. I sent for and saw A. T— yesterday. His vision is reduced to shadows. There is general congestion of the eyeball, iritis with hypertrophied vessels in the iris, lymph in the anterior chamber, and the prognosis appears hopeless.

The iritis in these two cases could scarcely have been sympathetic to the original injuries, for the injured eyeballs had been enucleated respectively nine months and seven months before definite symptoms occurred in the eyes that were retained. Still I fancy that an injured eyeball, although enucleated without long delay, may render delicate its fellow, or even predispose it towards a destructive form of iridocyclitis, not easily distinguishable from sympathetic ophthalmitis. One might quote other cases where, after removal of a damaged eye, its fellow has become irritable or inflamed. Perhaps among the working classes this may to some extent be accounted for by the disability caused by the loss of one eye driving the patient to ill-paid or unhealthy occupation.

I think Mules' operation has distinct cosmetic advantages, but that it should be recommended only in very

recent injuries; that there is danger where a fistulous opening remains, and that neuralgia may at any time render the stump unbearable. It would be of value to have records of cases operated on several years ago; many patients appear to do well for a time.

On May 20th, 1887, I inserted a *silver* artificial vitreous into the eviscerated sclera of an eyeball which had been damaged a few hours before. The patient left the hospital well in ten days. A glass eye was worn for about nine years with absolute comfort, and with so good a cosmetic effect that the patient was well known among his workmates as having a glass eye which looked so well and moved so freely as to be scarcely distinguishable from its fellow. In November, 1896, he returned to me complaining of pain in the socket. He had broken his glass eye some months previously without damaging the stump, and had not worn another false eye since. He thought he had caught cold in the socket: for some weeks it had irritated him and prevented sleep from severe neuralgia. There was a well-defined, blackish-red mass towards the apex of the orbit, somewhat resembling and at first believed to be a melanotic sarcoma. Multiple puncture having failed to relieve the symptoms, a free incision allowed the escape of a blackened silver ball which had caused argyrosis through the sclera and its conjunctival covering. Since the operation the patient has been quite well.

The following case is worthy of record as a complete recovery of both eyes after sympathetic inflammation. It also raises a question as to the absolute safety of using the cautery in prolapse of the iris.

S. B—, æt. 36, admitted into Bristol Eye Hospital on December 17th, 1896. The left eye had been injured twelve days ago by a paraffin lamp,—a perforating wound in the ciliary region of the cornea with an iritic prolapse as large as a pea, but flattened and difficult to cut off. The prolapse was cauterised the same day, and on

January 2nd the patient was discharged with some iritis; the free part of the pupil was fully dilated.

January 14th.—Eye has been inflamed; is now quieter.

26th.—The right eye has been inflamed a week. Iritis and posterior synechiæ; no keratitis punctata. Left iris a good colour, but keratitis punctata. Patient readmitted to hospital. Atropine both, and Hyd. c Cretâ.

28th.—Right pupil not fully open.

29th.—Both pupils not well dilated. Severe temporal neuralgia both sides.

February 8th.—Eyes better; keratitis punctata both. Slight posterior synechiæ both.

17th.—Intended to remove left eye, but vision improving in both. Operation postponed.

March 4th.—Keratitis punctata less in both; no synechiæ. Fundi visible. Discs not well defined, appear hazy. Vision variable.

April 8th.—Distinct improvement in all respects.

30th.—L. + 3 $\frac{5}{5}$, posterior synechiæ; a few spots of keratitis punctata; disc badly defined, veins enlarged. T. n. R. + 3 $\frac{5}{5}$; two small iritic tags. T. n.; ten or twelve specks of keratitis punctata. Discharged.

May 18th.—Both eyes quite satisfactory; no keratitis punctata. A few tags of iritic adhesion.

Has not yet returned to work, but has been exposed to sunlight. To go to work and report progress.

Table of vision of S. B—.

	Dec. 17, '96.	Jan. 27, '97.	Jan. 28.	Feb. 3.	Feb. 4.	Feb. 8.	Feb. 18.
R.	$\frac{5}{6}$ ...	$\frac{5}{60}$ ...	$\frac{5}{36}$ ...	$\frac{5}{24}$ ...	$\frac{5}{9}$ ...	$\frac{5}{18}$ + 1·5 $\frac{5}{9}$ ...	+ 1·5 $\frac{5}{6}$
L.	$\frac{4}{60}$ ...	$\frac{4}{60}$ ...	$\frac{3}{60}$ ...	$\frac{3}{6}$ ...	$\frac{3}{60}$ ...	$\frac{5}{60}$ + 3 $\frac{5}{36}$ ...	+ 3 $\frac{5}{18}$

	Feb. 23.	March 16.	April 6.	April 30.	May 18.
R.	+ 2·5 $\frac{5}{6}$ ...	+ 3 $\frac{5}{5}$ ...	$\frac{5}{6}$ tiring to $\frac{5}{18}$ ...	+ 3 $\frac{5}{5}$ ...	+ 3 $\frac{5}{5}$
L.	+ 3 $\frac{5}{12}$ ...	+ 4·5 $\frac{5}{6}$ ...	— ...	+ 4 $\frac{5}{5}$ ...	+ 4 $\frac{5}{5}$

Scopolamine was much used in this case; it caused giddiness and numbness of arms.

(*June 10th*, 1897.)

Mr. Adams Frost said he would be sorry to raise the whole question of comparison between enucleation and Mules' operation, because a committee had been appointed by the Society to consider the subject; but, as he had done the operation devised by Mules over one hundred times, he would like to refer to one or two points which had been mentioned. Although Mr. Cross seemed to be of opinion that Mules' operation was not so efficient a safeguard as enucleation against sympathetic affections, he did not gather that Mr. Cross adduced any facts in support of the statement. Sympathetic ophthalmia had occurred many times after enucleation. In Mr. Cross's case the operation was not done until three weeks after the injury, and the sympathetic ophthalmia occurred fourteen days later. Therefore the facts, as far as they went, were quite consistent with what had happened in enucleation, and he did not see that it bore on the relative safety of the operations. As regards the cosmetic effect, there could be no question that Mules' operation was superior to enucleation. As to a fistulous opening, and the trouble arising from that, if such an opening remained the operation could not be regarded as a success. He had seen several cases in which a fistulous opening remained, but in the majority of them the globe had to be subsequently removed. Mr. Cross had asked for facts as to the after progress of the cases. He (Mr. Frost) had taken careful notes of all cases which he had been able to follow up. One he had seen nine years, and the other eight years after the operation, and a good many more after a shorter interval, and in no case in which the patient left the hospital with the wound completely closed had there ever been any trouble. Not only was there an absence of major troubles, but the slight troubles which were fairly common after enucleation did not occur nearly so frequently after Mules' operation. It was an important point that after so long an interval there did not seem to be any tendency for the scar to give way. As to movement, he recently saw a case some

months after operation by Mules' method had been performed. The patient had nystagmus in the good eye, and there was quite as complete a nystagmus in the artificial eye.

Mr. Bickerton remarked that he had done Mules' operation a considerable number of times. He thanked Mr. Cross for bringing the subject forward, because he believed it would be *the* question in the ophthalmic world before long; for when the public learnt that there was an alternative operation with preservation of a better cosmetic effect, they would think for themselves, and would want to know the grounds on which enucleation was recommended. He was extremely glad to record that the very facts which had led Mr. Cross to the conclusion as to the superiority of enucleation led him (the speaker) to the diametrically opposite opinion. Mr. Cross's qualified approval of Mules' operation was due to the advent of sympathetic inflammation in a certain number of cases which he had operated on in this way. In vol. vii of the Society's 'Transactions' Mr. Cross related two cases of sympathetic inflammation which had occurred out of seven operations, and which Mr. Cross had attributed thereto. But it was extremely interesting to notice that both in these cases and in the case related by him this evening a perfect recovery of vision, $\frac{20}{20}$ and J. 1, had occurred. Therefore granting, for the sake of argument, that the sympathetic inflammation was actually produced by the operation, it was a sympathetic inflammation which was capable of complete cure. He (Mr. Bickerton) had recently himself had a case of sympathetic ophthalmia which had followed a successful Mules' operation, but in place of shaking his faith the result had inspired in him greater confidence. A blacksmith æt. 45 was injured by a flying fragment of steel. As degenerative changes set in Mules' operation was performed twenty-one days after the injury, the patient leaving the hospital on the eleventh day. He returned twenty-one days later with sympathetic inflammation—

there being a complete ring synechia—of a week's duration. Thus sympathetic inflammation commenced forty-six days after injury, and twenty-five after operation. By almost poisoning him with atropine, then substituting hyoscine and scopolamine, the adhesions completely gave way, leaving a complete circular ring of pigment on the anterior lens capsule, and he left the hospital ten days later with vision $\frac{6}{5}$ and the eye perfectly white. He (Mr. Bickerton) then felt that though sympathetic ophthalmia might occur after Mules' operation, as it might occur after any other eye operation, if its nature was such that with treatment a perfect result could be so quickly obtained, then sympathetic ophthalmia had lost its terrors. Further, Mr. Cross attributed to removal of the artificial globes in the two cases related in vol. vii, and to the enucleation of the stump in the case related that evening, amelioration of the sympathetic affection; but in his (Mr. Bickerton's) case he neither removed the sphere nor did he enucleate, yet a perfect recovery in ten days resulted. Then Mr. Cross seemed to have the idea that sympathetic ophthalmia was very frequent after Mules' operation, as compared with enucleation. But in the committee's report on sympathetic ophthalmia (vol. vi) he found that out of 200 cases of it no less than 30 occurred after enucleation. Now Mr. Brudenell Carter had done about 150 Mules' operations, Mr. Adams Frost about 125, and he had done about 50, a total of 325, with only one case of sympathetic ophthalmia. Another point which had been made was that Mules' operation *caused* sympathetic ophthalmia. To prove this we must get sympathetic ophthalmia following Mules' operation on an eye which could not itself provoke sympathetic ophthalmia, such as a degenerate blind eye from primary chronic glaucoma which had never been operated upon. In conclusion, he might say that he did not intend to do enucleation again except for tumour or exceptional condition.

Mr. Critchett remarked that he had enucleated some

hundreds of eyes—500 would be within the mark,—and he could only remember two cases of ophthalmitis following enucleation.

Dr. Argyll-Robertson said he could corroborate Mr. Critchett's statement. He thought his own enucleations would run into four figures, and he could only bring one case to mind in which sympathetic ophthalmitis had followed enucleation.

The President said he did not know how many eyes he had enucleated, but the number was very large, and he believed he had only three cases in which sympathetic ophthalmitis followed. The question whether sympathetic disease occurring after enucleation or Mules' operation turned out to be less severe than in the common cases without enucleation was of practical interest, and it might be important in regard to the doctrine of the essential pathology of the disease. But it would be in the present state of knowledge hazardous to apply this truth, if it be one, to the treatment of a case.

The President asked whether he rightly understood that Mr. Bickerton, in his estimation of the frequency of sympathetic disease after enucleation, took the total number of cases reported on by the sub-committee of this Society some years ago. [Mr. Bickerton said this was so.] No calculations of frequency applicable to sympathetic disease as a whole could be based upon the 200 and odd cases mentioned in that report, because they were all selected for some particular reason, embracing, *e. g.*, all the cases of post-sympathetic ophthalmitis which could be found at the time.

Mr. Snell said he would like to hear from members whether, in their opinion, sympathetic ophthalmia occurred as frequently now as formerly. His own view was that it did not, and he felt certain he did not enucleate nearly, comparatively speaking, so many eyes as in previous years. He thought the fact was attributable to the greater care which was taken of every wounded eye, and to the elaborate instructions for effective treatment which

were given to house surgeons, such as removing the tags of iris, the immediate union of scleral wounds by uniting the conjunctiva, and the free use of antiseptics. Mr. Cross had mentioned a very interesting case of a patient who recovered perfectly from sympathetic ophthalmitis, and retained the sight of both eyes. There was a case of his (Mr. Snell's) related in the 'Transactions' of the Society very similar to it. There were two varieties of sympathetic ophthalmitis: one a mild kind, which subsided in some cases even without the exciting eye—which might still be good—being enucleated; and the other a very severe form, which went from bad to worse, and which nothing seemed to check. As to Mules' operation, he had performed it a few times, and found it difficult to get over his surgical prejudice to sealing up a foreign body in a closed cavity. Perhaps when the committee made its report he would do Mules' operation more frequently. He had only met with two instances of ophthalmitis after enucleation, and this was in several hundred cases. One was reported in the 'Transactions' of the Society, and the other occurred in a child a few days after enucleation which had been unduly delayed to meet the parents' objection. Mr. Cross's cases of sympathetic ophthalmitis after Mules' operation were most important. Mr. Snell anticipated that when Mr. Bickerton had operated on a larger number of cases he would find the proportion of sympathetic ophthalmitis greater than had been his experience so far.

Mr. Treacher Collins said he would like to hear whether Mr. Cross had examined the stump of the eye pathologically.

Mr. Cross said he could not answer the question, as he was on the Continent when the patient he had mentioned came back to the hospital, and the stump and false vitreous was removed by a colleague; no record of the condition of the stump could be found, which was very unfortunate. He thought the discussion that had taken place justified him in bringing the subject forward. One

reason was that the question was occupying the attention of a sub-committee, and he thought if they had a debate, some fresh ideas might be evolved which might not occur to the mind in the quiet of the library. The public were asking whether there was not some operation which was better than removing the eyeball, and they must be prepared with a good reason for choosing either evisceration or enucleation. The experience of the President, Mr. Critchett, and Dr. Argyll-Robertson was that sympathetic ophthalmitis after enucleation was very rare. His own experience entirely corroborated that, but he had had no less than three cases of undoubted sympathetic ophthalmitis after Mules' operation. One was cured only after seven months' careful treatment in hospital; it appeared to be almost as hopeless a case as he had ever seen. Of course it might be said that he was careless as to his antiseptics, but he had been under Lister at King's College Hospital at a critical period of his career, and had become imbued with Lister's ideas. Unless the eye were recently injured, he still thought the safer plan was to enucleate. He had himself quoted a case in which the silver ball was in a man's sclerotic ten years, and then the trouble he had was relieved by removing the artificial vitreous. Where the sympathetic mischief occurred after either operation the cases seemed often very slight. He admitted that his first two cases were affected very slightly, so that there might be something in what Mr. Bickerton said. At the earlier meeting to which he had referred, although Mr. Mules was himself present, and considered they were cases of iritis, the practically unanimous opinion of the Society was that they were really cases of sympathetic mischief. The best thing perhaps to do immediately after injury was Mules' operation. The time was coming when they would be almost bound to put it to patients that in case of hopeless injury there was something to be done short of removing the eyeball; that in some respects the cosmetic effect was better by the newer method; but that for the absolute

safety of the other eye radical removal was preferable.

---

3. *On the mounting of macroscopic eye specimens.*

By Devereux Marshall.

While engaged in mounting eyes for the museum in the very excellent way originally suggested by you, sir, viz. in glycerine jelly, and which was afterwards modified by Mr. Priestley Smith and Mr. Treacher Collins, I have felt that there is room for improvement in one or two particulars.

First, the jelly, although nice and clear, has, as a rule, a somewhat brownish-yellow tinge; and secondly, although it is of an excellent consistence for the cooler temperatures, it is quite inappropriate for hot climates; and the hottest summer weather which we experience in London has sometimes proved too great, and the jelly has commenced to melt, or at least to exude moisture from its surface. If this goes on to any extent it will of course spoil the specimen, and necessitate taking it down and remounting it when the weather is cooler.

I have seen specimens sent round this room during summer meetings become quite spoilt by the melting of the jelly, and I have frequently expected to find the same thing happen to preparations of my own when the temperature has become unusually high. Many a time I have assured gentlemen living in India, Australia, and America that it is totally useless their thinking of starting a museum in their own country similar to the one we have at Moorfields, as all the specimens would be spoilt as soon as the hot weather set in, unless they were kept in ice.

Unfortunately these two conditions which I have tried to overcome defeat each other,—that is to say, it is easy enough to get a jelly which will not melt so readily by putting in a relatively larger quantity of gelatine, but this makes the colour much darker; and, conversely, if one puts in a relatively smaller quantity, in order to make it less coloured, the melting-point is at once lowered, and it shows a tendency to shrink and to flatten out the specimen.

While experimenting on this subject I once tried to dissolve some gelatine in water containing some formol; and though I had a large amount of water, and not much gelatine, I found that no amount of heat would send the gelatine into solution. If, however, formol were added to a hot solution of gelatine it did not cause it to precipitate; but, after having been allowed to cool for some hours, it was then impossible to melt it again.

This is exactly the sort of thing I had been seeking after, and, working on this principle, one can now mount specimens in glycerine jelly and make sure of not getting them spoilt by heat.

I find the following formula, modified from Hamilton, to be one of the best for making a good, clear, firm jelly:—Cut up 30 grammes of gelatine and put it in a flask with 240 c.c. of a cold saturated solution of boracic acid, made by dissolving boracic acid in boiling distilled water. Let it stand for a short time, and add 80 c.c. of glycerine and the white and shell of one egg, and thoroughly shake the mixture. Heat gradually in a water-bath, and when the albumen is commencing to be precipitated add 1 c.c. of glacial acetic acid. Boil thoroughly for some minutes, and then filter once through flannel, and once, or if necessary twice, through filter-paper in a hot-water funnel. This will give a jelly with a melting-point between 95° and 100° F., and therefore the specimen mounted in this is hardly likely to suffer through the ordinary summer temperature in this country, though it would obviously be of little use in tropical or semi-tropical climates. I think

that jelly made in this way is less coloured than most specimens made in other ways, and, as far as I have seen, it shows no tendency to shrink. A very simple process will now render this quite proof against heat.

Take a bottle of jelly and stand it in hot water until it is fluid, then pour a sufficient quantity into a test-tube which contains some formol, making the proportion of 2 or 3 minims of the latter to each drachm of the former; thoroughly mix by shaking the tube well, and then proceed to mount the eye in the usual manner. The air-bubbles can be easily removed by sucking them up a glass tube before the object to be mounted is put in; any larger bubbles can be at once dispersed by touching them with a red-hot needle. The preparation is then left to get cool. After from twenty-four to forty-eight hours the jelly will have undergone no alteration in appearance, but a certain change has taken place in it, for it will be found impossible to render it again fluid by heat, and it could now be exposed to a temperature considerably hotter than a tropical sun without becoming in the least degree liquefied.

I mentioned just now that a much whiter jelly could be obtained by using less gelatine, and if one uses 20 grammes instead of 30 in the same amount of fluid the jelly is but very faintly coloured, and when seen in small quantity it appears almost white. Of course it is not so solid, and its melting-point is reduced 10 or 15 degrees; but still formol, even here, will prevent its melting. One should be careful, however, in reducing the amount of gelatine too much, as although the jelly looks excellent, yet it has a tendency to shrink, and if it does this it will flatten and spoil the specimen in time. It will be found that about 25 minims of formol to the ounce of jelly is sufficient to very considerably raise the melting-point, if not to render it permanently solid.

With regard to published papers on this subject, I cannot find many references.

Dr. William H. Wilder read a paper before the American

Medical Association last year, wherein he described his method of mounting eyes, and stated then that the vapour of formol, allowed to come in contact with the jelly, prevented it from again becoming fluid. The way he did it was to place a cup with some formol in it beneath a bell jar with a specimen mounted in jelly; this in his hands gave excellent results. I have tried this myself, but although the lower surface becomes hardened, yet, so far as I have seen, it hardly seems to penetrate a thick layer of jelly sufficiently, and I prefer to mix a little formol with the jelly, and then it gets equally diffused all through.

Orth, in the 'Berliner klinische Wochenschrift' for March, 1896, states that embedding in gelatine to which 1 per cent. of formol has been added is successful for preserving tissues.

What exact chemical change takes place in gelatine when formol is added to it I am unable to say, but whatever it is, it appears to take time to develop. It is totally useless to add a small or even a large quantity of formol to jelly and allow it to get set, and then again to immediately subject it to heat. If this is done it will at once return to its fluid state: this applies even if the tube has been surrounded with ice. If, however, the specimen be allowed to stand in a cool place for one or two days, its condition will remain unchanged however much heat is applied. Boiling water has no more effect upon it after solidification has taken place than dry heat, and one can boil water on the surface of the jelly in a test-tube without the two in any way mixing, and without causing any change to take place in the solid block of jelly.

Possibly this action of formol on gelatine may be known to others here to-night who may have also worked on similar lines to those I have indicated, and if so I should much like to hear their experience.

(*November 12th*, 1896.)

Mr. JOHN GRIFFITH said the plan recommended by Mr. Priestley Smith for the preparation of the jelly was the one he adopted. To render the gelatine aseptic he used a 1 in 20 solution of pure carbolic acid. He thought liquefaction was mainly due to imprisoned organisms. Another method was to paint over the surface with a pure solution of carbolic acid. It caused the gelatine to be slightly corrugated, but that was the only drawback.

Mr. MARSHALL, in reply, said the gelatine he used was made by the firm mentioned by Mr. Priestley Smith. He proposed to try filtering the solution before adding the glycerine. With regard to the difficulty of getting the specimen out again after mounting in formol jelly, such a course was very seldom necessary; but when it was, the jelly could be cut away sufficiently for microscopic examination. He had never found that the glycerine jelly went bad, and there were specimens in Moorfields which had been put up in that way six or seven years ago, and were still good.

4. *Model illustrating Tscherning's theory of the accommodation.*

By PRIESTLEY SMITH (Birmingham).

THIS is a modification of a model illustrating the Helmholtz theory of accommodation exhibited to the Society in 1884. A representation of the anterior part of the eye in section is painted in white on a blackened board (Fig. 54). The lens is represented by a strip of thin steel bent to the proper shape, as shown in the figure by the unbroken white line. It is held in position by silk threads representing the suspensory ligament, which are kept in a state of tension by means of spiral steel springs passing outwards and backwards in the direction of the choroid. The thread on each side is connected with the

spring by means of a brass link. Holding this link between the finger and thumb on each side the observer can at pleasure slacken the zonula or render it more tense. When the zonula is slackened, the lens, becoming more spherical by reason of its own elasticity, assumes the form shown by the dotted line. When the zonula is rendered more tense, the lens assumes the form shown by the broken line. The former change illustrates the theory of Helmholtz, the latter that of Tscherning.

At the present moment (July 2nd, 1897) the evidence for and against the new theory may be briefly summarised as follows.

Helmholtz demonstrated an increase of lens convexity in the area of the undilated pupil; he inferred a general increase of sphericity due to slackening of the zonula. He put forward his theory as provisionally the most feasible, not as proved.

Tscherning, following Thomas Young, showed that during accommodation the refraction and convexity of the lens increase chiefly at the central area of the pupil, less and less towards the periphery, and in the peripheral zones not at all; the lens surface changes from a spherical to a hyperboloid curvature. He showed further that this change can be produced in the eyes of animals by tightening the zonula.

Tscherning's observations are of several kinds. They relate to—

1. *Spherical aberration.*—Did the sphericity of the lens increase during accommodation, the spherical aberration, other things being equal, would increase also. But a study of diffusion circles and shadows cast upon the retina shows no such increase, but the reverse; the peripheral zones of the lens do not increase in refraction as does the central area.

2. *Scheiner's experiment.*—Looking through two adjacent pinholes placed before the pupil at a point of light, the eye sees the light single at the distance for which it is focussed, double at any greater or less distance. With

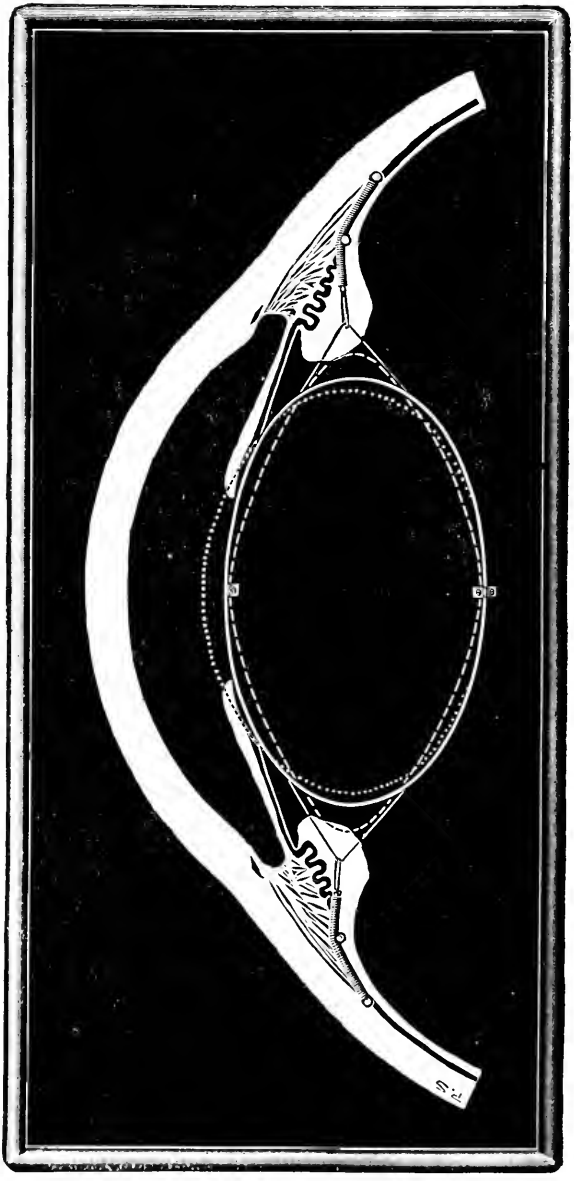

Fig. 54.

an instrument based upon this principle the refraction is estimated in different parts of the pupillary area at the same moment. During accommodation the increase of refraction, measured in this way, is greater at the centre than at the periphery.

3. *Reflection from the lens surface in the living eye.*—A series of electric lamps placed in a horizontal line before the eye are seen reflected by the lens. The varying degrees of displacement which these reflections undergo during accommodation are an index to the change of curvature in the lens surface. The convexity increases chiefly at the centre, less and less or not at all towards the periphery.

4. *Reflection from the surface of the exposed lens and traction of the zonula.*—The zonula being seized and rendered tense at two opposite points of the circle, the change of curvature occurring in the lens surface is studied by means of images reflected from its several zones. It is of the character already described.

Tscherning maintains, therefore, that in the act of accommodation the ciliary muscle contracts so as to increase the tension of the zonula, and to alter the lens surface from a spherical to a hyperboloid form. He shows that a given increase of convexity in the central area involves much less change in the general form of the lens than would be required according to the theory of Helmholtz. He founds his study on the work of Thomas Young, and does full honour to that great scientist.

Hess, on the other hand, has shown that during strong contraction of the ciliary muscle, especially under eserine, the lens becomes tremulous, and this he declares is incompatible with an increased tension of the zonula. Tscherning confirms the observation, but attributes the trembling of the lens to spasmodic action of the ciliary muscle. Hess, extending his observations further, shows that the lens besides being tremulous is displaced downwards, the displacement in all positions of the head being governed by gravity. This he urges can only be

explained by assuming that contraction of the ciliary muscle slackens the zonula.

(*July 2nd*, 1897.)

5. *The varieties and degrees of colour-blindness.*

By F. W. Edridge-Green, M.D.

(Communicated by Henry Power.)

The colour-blind may be divided into two distinct classes, which are independent of each other.

The first class includes those who are not able to see certain rays of the spectrum. There are two subdivisions of this class of colour-blind persons:

1. Those who are found to have the red end of the spectrum shortened.

2. Those who have the violet end of the spectrum shortened.

Persons belonging to the first subdivision are not able to recognise a red light at a distance as easily as the normal sighted, and in extreme cases it is not visible at all.

The shortened portion of the spectrum is indistinguishable from black; that is to say, not only is the red or violet not perceived as a colour, but it is not seen at all.

It now remains to consider the influence of a shortened spectrum upon colour vision. The first evident fact is that bodies reflecting light, the rays of which occupy the shortened portion of the spectrum only, appear black.

A very common mistake due to shortening of the red end of the spectrum is the confusion of pink and blue. If a person with considerable shortening of the red end of the spectrum is shown a pink, which is made up of a mixture of red and violet, the red consisting of rays occupying the extreme left of the spectrum, only the

violet is visible to him, and so the pink appears as a violet without a trace of red. This pink is, therefore, matched with a violet or blue very much darker than itself.

Mistakes which are due to shortening of the spectrum may be remedied if we subtract the rays occupying the shortened portion from the colour of confusion. For instance, if we take a blue and a pink which have been put together as identical by a person with a shortened red end of the spectrum, and look at them through a glass which is opaque to the red but transparent to the remaining rays of the spectrum, both will appear alike in hue and shade.

A person with considerable shortening of the red end of the spectrum will look at a red light (which is so dazzlingly bright to a normal-sighted person as to make his eyes ache after looking at it closely for a few seconds) at a distance of a few inches, and remark that there i nothing visible, and that the whole is absolutely black. It is obvious that the light must only consist of rays occupying the shortened portion of the spectrum.

I have constructed a test for this class of the colour-blind, which consists of a lantern with slides containing smoked glass, which, like mist or fog, is most transparent to the red rays at the extreme left of the spectrum. By means of these glasses we can show a red composed of rays from the terminal portion of the spectrum; if the observer fail to see this light we know that the red end of his spectrum must be shortened, and that he is unfit for the duties in which it is necessary to recognise a red light at a distance.

The strongest objection to the use of a wool test only is that a person may, through shortening of the spectrum, be unable to distinguish red from black, and yet be able to pass the test with ease, as it is obvious that this will not prevent him from matching a light green wool with other green wools.

The second class of the colour-blind make mistakes not because they cannot see any colour, but because they are

not able to perceive the difference between the colours which is perfectly evident to normal-sighted persons.

Both these classes are represented by analogous conditions in the perception of sounds. The first class of the colour-blind are represented by those who are unable to hear very high or very low notes ; that is to say, these notes are non-existent to them. The second class are represented by those who possess what is commonly called a defective musical ear. A person with a defective musical ear is not able to say when a violin is in tune with a piano, though he can clearly hear the sounds produced by both instruments. He may recognise the difference between the two when the violin is a tone sharper or flatter than the piano, but not when the interval is only half a tone. In extreme cases no difference is perceived between very high and very low notes.

The same thing is found with regard to the perception of colour. Normal-sighted persons see six distinct colours in the solar spectrum. These are red, orange, yellow, green, blue, and violet. All other colours are plainly modifications of these six,—for instance, yellow-green, blue-green, &c.

Those who have a very acute perception of colour can see seven distinct colours or points of difference in the spectrum. The seventh colour is seen between the blue and the violet.

In the first degree of colour-blindness five instead of six distinct colours are seen, orange having disappeared as a definite colour. In the next degree only four colours are seen, blue having disappeared as a definite colour. Yellow next disappears, three colours being seen. In the next degree only two colours are seen, green having disappeared. With increasing colour-blindness less and less difference is seen between any part of the spectrum, until only the ends are recognised as being different in colour. Finally no difference in colour is seen between any part of the spectrum.

I have classified this class of the colour-blind in

accordance with the number of colours which they see in the spectrum, but I have not relied upon this examination alone, but confirmed it by other tests. For instance, I have found that a person who could see four colours in the spectrum would classify two hundred pieces of coloured material or skeins of wool as if he saw four colours, never making mistakes between these four.

An examination with the spectrum, therefore, gives us a complete key to the mistakes made by the colour-blind.

Those who see five colours make the following mistakes. They always find a difficulty with orange, rarely using the word, and regarding it as a superfluous term. By artificial light they confuse orange with reds, pinks, and browns. They do not see the slight differences between colours which are evident to the normal sighted. Thus they are rarely able to say, without comparison, whether a certain green is a pure green, or has a shade of blue in it, to use a common expression. In the same way they confuse crimson with scarlet, and deep purple-violet with violet. They never make mistakes between the colours corresponding to the five points in the spectrum which they distinguish as different.

In this subdivision, like those which follow, the defect in colour perception is not limited to one part of the spectrum; the colour sense seems to be diminished as a whole.

Those who see four colours in the spectrum make all the mistakes made by those who see five colours, but in a more marked degree. In addition they do not recognise blue as a definite colour; when told to classify a number of coloured objects, they put the blues with green or violet. Colour is to them a feeble quality of objects, but they never confuse the four colours (red, yellow, green, and violet) which they have distinguished in the spectrum.

Those who see three colours in the spectrum (red, green, and violet) make all the mistakes made by those who see four colours, and in addition do not recognise yellow as a colour, but put it with green or red.

They also confuse green, purple, and grey. They can always distinguish between the three colours they saw in the spectrum.

Those who see only two colours in the spectrum confuse red, orange, yellow, and green on the one hand, and blue-green, blue, and violet on the other. Colours corresponding to the neutral point, and equal mixtures of colours belonging to both sets, are mistaken for grey.

In cases in which shortening of the spectrum is associated with a diminution of the colours seen, the position of the colours is altered. For instance, a person seeing two colours in the spectrum has the position of the neutral point nearer the violet when the red end is shortened, and nearer the red when the violet end is shortened, than in cases in which the spectrum is of the normal length.

(*June 10th*, 1897.)

---

6. *Young woman presenting the clinical characters of embolism of the central artery of the retina, first in one eye and then in the other; no evidence of heart disease; amenorrhœa and epistaxis; ? hæmorrhage into the optic nerve sheath.*

By E. Treacher Collins.

Ellen W—, an anæmic girl æt. 19, came as an outpatient to the Moorfields Hospital on January 21st, 1897.

She stated that a year and seven months ago she woke up one morning and found that the sight of her right eye had gone, it having been perfectly good the previous night, and that since then there had been no improvement in it.

A fortnight ago a precisely similar loss of sight occurred in her left eye.

Right eye.—V. = fingers at 1 foot. Field contracted, absolute central scotoma. Pupil active to light.

Ophthalmoscopic examination.—The optic disc is exceedingly white; the retinal arteries are much narrowed, especially those going downwards.

Left eye.—V. $= \frac{6}{60}$; J. 1 with difficulty at 7 cm. Defect of field in lower and inner part extending almost up to the fixation point. In other directions field normal. Pupils active to light.

Ophthalmoscopic examination.—Optic disc pale; retina around optic disc and yellow spot, of a greyish colour and œdematous-looking. The greyness is most marked at the upper part just above the yellow spot. Cherry-red spot at macula. The retinal arteries are somewhat diminished in size, all about equally so; they all pulsate when pressure is made on the globe. The artery going up and in near the disc is for a short distance the colour of a vein; the part beyond this pulsates well.

Since she was first seen the condition of the left eye has changed but little; the œdematous-looking condition of the retina is less marked than it was, but the vision remains the same.

She has never had any rheumatism, but complains of palpitation of the heart. Dr. Wynter, who has kindly examined her for me, says: "I should say there was no disease of the heart present. The first sound is very soft considering the accentuation of the second, but I could not satisfy myself that there was any murmur."

She commenced to menstruate at thirteen, but has never been regular; there have always been long intervals between her periods, and the flow has always been scanty. She had not menstruated for quite six months previous to the failure of vision in her right eye, and it is now seven months since she was last unwell.

She has had bleeding from her nose almost every day for the last year; this bleeding stopped a few days previous to the failure of vision in her left eye, and has not returned since. She had no bleeding from the nose before the right eye became affected.

Her mother died of pleurisy. Her father is living, and has lately suffered from gout in his feet.

(*Card specimen. January 28th*, 1897.)

Mr. Marcus Gunn said that Mr. Collins' case was very similar ophthalmoscopically to that which he exhibited before the Society last session. The suggestion that his case might have been one of hæmorrhage into the optic nerve sheath was made chiefly on account of the youth of the patient, and the fact that there was amenorrhœa. The latter feature was also present in Mr. Collins' case.

---

7. *A peculiar fundus oculi.*

By H. Work Dodd.

William S—, æt. 23, bricklayer's labourer.

Family history good. No history of venereal disease, injury, or foreign body. Heart and urine normal.

A short time ago patient applied for admission into the army; he was refused on account of defective vision in R. eye; until then he was unaware of any difference between the two eyes.

Left eye: V. $= \frac{6}{5}$.

Right eye: hand reflex. Counts fingers at 1 metre.

Retinoscopy: L. — $-0{\cdot}5$ D. — $+1$ D.; R. — $+1$ D. — $+1$ D.

The points of interest in the case are situated in the right fundus oculi. Projecting from the region of the right disc is a densely white flask-shaped mass with its longer diameter horizontal. It obscures the upper half of the disc, and appears to be attached by a neck to its upper

and inner third; from this attachment it projects forward into the vitreous chamber. The apex of the opaque body, which is tufted, is best seen with a + 8 D. or + 9 D. lens; it is fixed, and no vessels are visible upon it.

At two points above and to the nasal side the retina appears to be drawn forwards in two sharp folds, seeming each to contain a retinal vessel, and to spring centrally from the main mass. Their summits are best seen with a + 3 D. or + 4 D. lens.

There are several patches of choroido-retinitis, chiefly on the temporal side of the disc, and the retina and choroid generally appear to show remains of past inflammation. There are no subjective symptoms apart from the amblyopia.

(*Card specimen. January 28th*, 1897.)

Mr. Lawford Knaggs said he had seen and watched a case which in the end presented much the same appearance as existed in Mr. Dodd's case. The patient, who was struck in the eye when playing "tip-cat" by the rebound of the "cat," was found a few days after the injury to have a blood-clot projecting from the disc into the vitreous. The disc was completely concealed. He was under observation some years, and the disc became covered by a mass of white connective tissue, but without new vessels. He thought that hæmorrhage might possibly explain the condition in Mr. Dodd's case.

Mr. Dodd said he hardly thought his case was a hæmorrhage, because the retina was attached to the equator of the body, which projected forwards, descending from it in folds, and in the summit of these retinal folds were retinal vessels. The body came from behind forwards, carrying the retina with it. It could hardly be an organised clot, because the apex of the white body was free.

In reply to the President, Mr. Dodd said there were no signs of any abnormal constitutional state; the urine had been tested, the organs examined, and everything he

could think of had been gone into. There was nothing in the previous history to suggest a cause for the condition. The case had been under notice about six weeks. The possibility of retinitis proliferans had occurred to him, but the absence of vessels was rather against that view. The patient was not liable to hæmorrhage.

---

8. *Result of iridectomy in case of chronic glaucoma.*

By R. Marcus Gunn.

Louie C—, æt. 30, teacher, came to Moorfields on June 20th, 1896. Has had attacks of pain and tiredness in both eyes for the last seven or eight years. Has noticed mists and coloured halos round lights for two to three years, and during this time the vision has got steadily worse, the L. the last to be attacked. Pupils wide (6 mm.), the right rather the wider; act sluggishly to light. Upper limb of iris in both is narrow, and evidently adherent to cornea at angle; anterior chambers shallow. T. + 1 in R., and + 1·5 in L. Deep glaucomatous cupping of both O. D's. up to apparent edge all round; pulsation of arteries and veins; the R. disc paler. R. $\frac{6}{18}$; L. $\frac{6}{36}$, not improved by glasses. With diaphragm R. $\frac{6}{9}$ partly, and L. $\frac{6}{12}$. Field contracted nasally in both eyes (see Charts, Figs. 55, 56). T. decidedly diminished by eserine.

June 24th.—R. iridectomy up and out.

July 1st.—L. iridectomy up and out; iris friable.

11th.— { R. $\frac{6}{12}$ $\bar{c}$ diaphr. = $\frac{6}{6}$ partly.
L. $\frac{6}{12}$ $\bar{c}$ diaphr. = $\frac{6}{6}$ partly. T. n. in both.

October 8th.— { R. $\frac{6}{5}$ well; $\bar{c}$ + 0·25 cyl. = $\frac{6}{5}$ perfectly.
L. $\frac{6}{5}$ nearly; $\bar{c}$ + 0·25 cyl. = $\frac{6}{6}$ perfectly.
T. n. but rather full. Fields of vision full (see Charts, Figs. 55, 56).

FIG. 55.

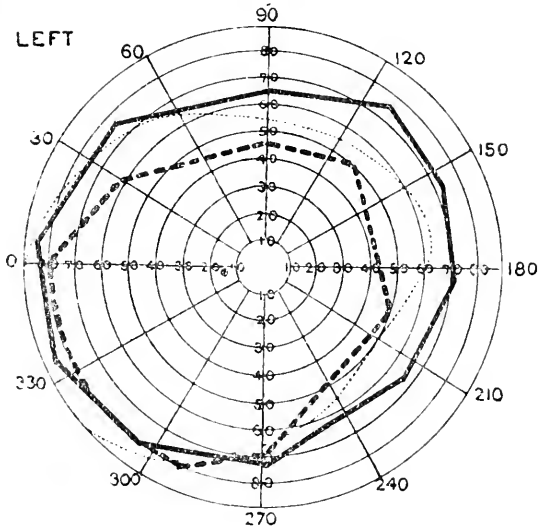

FIG. 56.

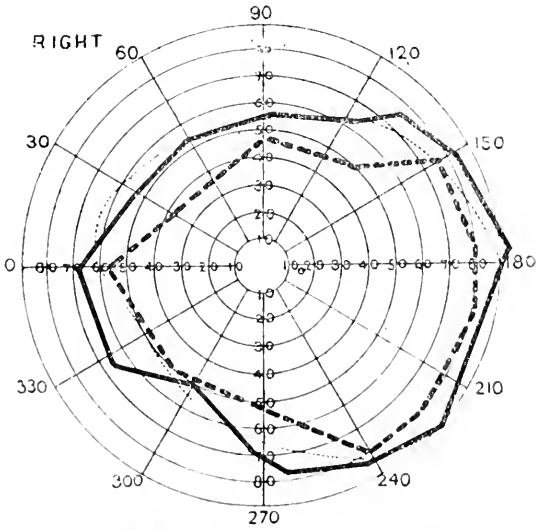

Charts of fields in Mr. Gunn's case of chronic glaucoma. The interrupted line shows the field before, and the continuous line the field after iridectomy.

Remarks.—This case is shown on account of the marked improvement in vision which followed iridectomy in a chronic case with deep cupping. The association of excellent visual acuity with so very deep cupping is most exceptional.

(*Card specimen. October 15th,* 1896.)

The PRESIDENT said the opportunity was a favorable one for asking, first, what was the experience of those present on the results of operations for glaucoma in young people; secondly, whether in glaucoma occurring in early life there was a tendency for the cupping to be exceptionally deep and disproportionate in extent to the severity of the other symptoms: he had an impression that it was so. Again, was the prognosis of glaucoma in young adults peculiar, and was there anything to be said about the depth of the cup in ordinary cases? The question also arose in his mind whether, thirdly, when glaucoma was present in early life, was there not often a family history of the affection in previous generations? He remembered one example in which he operated on a man aged between sixty and seventy for chronic glaucoma; his daughter had chronic glaucoma when between thirty and forty, and her daugher had the same disease before she reached the age of twenty. An interesting point in connection with this case was, that before glaucoma developed in the member of the second generation he had an opportunity of seeing her, and noticed that she had unusually deep cups. All three did well after the operation. He believed there was an impression that operations for glaucoma in young adults were particularly unfavorable.

Mr. BERRY said the remarks of the President with reference to heredity and the depth of the cup in glaucoma were extremely suggestive. He was unable to give any information from his own experience on either of those points, but it appeared to him that as a rule in young people glaucoma was never what might be termed

primary idiopathic glaucoma, but was always connected with some other disease. He could recall a number of cases where he had seen different diseases in the two eyes. For instance, a case at present under his care, a boy aged eleven, had detachment of the retina in one eye and glaucoma in the other. He had seen cases of glaucoma in one eye and excessive myopia in the other; also glaucoma with distinct choroidal patches—choroiditis. He also knew of heredity in the tendency to get choroiditis, which might or might not be associated with a tendency at the same time to hereditary myopia. His own impression as to the cause of the operation for glaucoma in young persons being frequently unsuccessful, was that those cases were complicated ones; and the same might be said regarding the very rare condition of glaucoma at birth, of which he had seen three or four instances. In none of these did he succeed in getting a good result by operation.

Mr. Power said he believed glaucoma was very rare in young persons. He could remember having had about three at St. Bartholomew's Hospital, and in all of them the iridectomy was unsatisfactory. One girl aged about fourteen, without any apparent cause, certainly without any obliteration of the anterior chamber, had a well-marked attack of the disease. The eye was hard, there was gradual loss of vision, and the symptoms generally were those of glaucoma. After considerable hesitation he performed iridectomy, and his impression was that she was rather worse after it. Vision continued to deteriorate, and after an interval of a few weeks she came back to him with the other eye in much the same condition. She was very carefully examined by himself and another ophthalmic surgeon, and they decided to give her the chance of iridectomy in that eye also. But that did not succeed either, and he believed the patient went blind though no cataract developed. He also remembered a boy whose case was somewhat similar, only one of whose eyes was operated on, and that also failed.

Therefore his experience went very much against the operation in young persons. The lack of success seemed to be due to some cause other than pressure or tension,—due to troubles occasioned by difficulties in the escape of the fluids of the eye.

Mr. Lawford asked if Mr. Gunn had any knowledge of the ophthalmoscopic condition of his patient before the glaucoma came on, or was the case not seen until the attack was advanced? If the former, was he able to say whether the discs were unusually cupped? He thought it possible that it was a case in which there was an unusually deep cup in the disc, and that the present very marked excavation was not wholly and perhaps not largely due to the glaucoma.

In reply to Mr. Lawford, he said that the patient had had failure of vision for two or three years, and during that period she observed halos of coloured light around the lamp or candle. From the way she gave her history he concluded that the condition was continuous over the period named. Nevertheless it was possibly intercurrent. No ophthalmoscopic examination had been made prior to his seeing the patient. He agreed as to the possibility of the present excavation not being wholly due to the glaucoma, except that it was very much undermined.

Referring to the President's observations, he said he had not inquired into the family history, but would do so.

---

9. *Case of cataract extraction in an albino.*

By Arthur Sandford, M.D.

The patient, an unmarried woman æt. 60, had all the characteristic appearances and symptoms of albinism in a marked degree, with the exception of nystagmus and photophobia, which were comparatively slight. She had double

senile cataract, the concentrically striated lens and the colourless iris being the same shade of pearl-grey.

I was anxious to find some record indicating the possible influences of the congenital condition upon the operation for cataract, but was unable to discover any reference to the subject.

I removed the left lens with a narrow iridectomy.

The operation and subsequent progress of the case was satisfactory, except that unusual hæmorrhage took place from the cut surface of the iris. This continued for some ten days, the anterior chamber keeping about one eighth full of blood, so that the leakage from the vessels and the process of absorption were apparently just balanced. The administration of ergot and iron seemed to check the hæmorrhage, which I believe was largely due to the peculiar condition of the apparently attenuated iris. The patient finally left with V. (corrected) $= \frac{6}{9}$; reads J. 6.

In the second eye and in similar cases I shall omit the iridectomy. The fact that the co-existence of cataract with albinism is rarely met with induced me to bring this case before the Society.

(*October 15th*, 1896.)

The PRESIDENT said he had operated on one albino, an old man, who had used his eyes very much, and was myopic. Surgically the patient did well, but there was some iritis, and circumstances prevented the performance of any secondary operation. But there was nothing unfavorable about the healing of the wound.

Mr. SNELL said he had operated on both eyes of one albino, an elderly man, many years ago, and he did very well indeed. There was a certain amount of amblyopia, but that the patient had always had.

Dr. DRAKE BROCKMAN said he had operated on a Hindoo albino in whom there were no complications at the operation. The case progressed very well.

10. *An attack of herpes ophthalmicus occurring shortly after extraction of cataract on the same side.*

By Simeon Snell.

Mrs. H—, æt. 75, was admitted into the Sheffield Royal Infirmary on May 1st, 1896, for the purpose of undergoing extraction of cataract on the right eye. She had suffered from inflammation, as she called it, of the right eye in childhood, and its vision had always since been impaired.

Extraction without iridectomy was performed on May 4th, and the subsequent progress was satisfactory.

On May 10th she complained of severe shooting pain on the right frontal region.

On May 12th an eruption of herpes had appeared on the right side over the distribution of the supra-orbital and supra-trochlear nerves, reaching upwards over the forehead and into the hair; it extended also downwards on the right side of the nose, and there was some eruption on the upper eyelid. The pain was intense, and the eruption was extensive, with a tendency to become confluent. It was altogether a well-marked instance of zona ophthalmica. The eye, however, did not become affected, and the progress towards recovery was uninterrupted, except that after the subsidence of the herpetic inflammation the eye perhaps remained longer "irritable" than it would have done in an altogether normal case.

June 11th, 1896.—V. + 15 D. = $\frac{3}{36}$ (eye always imperfect), with a round pupil and no adhesions of iris.

On June 8th she left the infirmary.

(*October 15th*, 1896.)

11. *Double facial paralysis and complete deafness; ulcers of cornea due to exposure; affection of the chorda tympani.*

By John R. Lunn.

William C—, æt. 43, a bricklayer, was admitted into St. Marylebone Infirmary February 17th, 1897, complaining of deafness, noises in the ears, and giddiness in the erect position. He had always had excellent health until eighteen months ago, when he fell and twisted his hip; he was treated a few days at a hospital, and then returned to work. Two weeks later a swelling over his left temple appeared, which became painful, though he never remembers striking his head when he fell. He was admitted into a hospital, where he remained four months; during the time he suddenly developed giddiness on standing, with facial paralysis and complete deafness. He then went to another hospital, but his symptoms did not improve. His eyesight, previously good, went wrong, so that he had to take to glasses. The patient chiefly complains of giddiness when lying in bed or sitting on a chair.

Nervous system.—Complete bilateral facial paralysis, the muscles showing the reaction of degeneration. No paralysis of soft palate or ocular muscles. Knee-jerks present. No ankle-clonus. The patient is unable to walk in a straight line, and rolls considerably when he turns round. Bladder normal. No anæsthesia. Loss of taste on the anterior part of both sides of the tongue. Very defective hearing, just hears a tuning-fork close to the meatus and when placed on the bones of the head. Perforation of both tympanic membranes. Vision good, $\frac{20}{50}$, and reads 1 J. $\bar{c}$ +2 D. (both). Shallow corneal ulcers seen in both eyes, which are unprotected by the lids in the daytime; one or two new ulcers keep coming, which stain with fluoriscene; fundus normal. When the patient is

asleep and under the influence of anæsthetic, both lids are closed when the levatores palpebrarum are relaxed.

May 13th.—The right lids were closed by stitches, and the left partially so. His general condition has not improved. The peripheral nature of the lesion is clearly shown by the completeness of the facial palsy and the affection of the chorda tympani.

(*Card specimen. June 10th,* 1897.)

---

12. *A stitch for the advancement or adjustment of the ocular muscles.*

By H. Lindo Ferguson, M.D. (Dunedin, N.Z.).

A silk thread is taken for the suture, and armed with a small curved needle at each end. The conjunctiva is divided by a vertical incision near the cornea, and freed from the globe till the tendon to be advanced is seen: the tendon is grasped and divided, being held with a fixation forceps till it is threaded.

The suture is then introduced, one needle is passed through the conjunctiva from without inwards near the cut edge, and at about the level of the upper margin of the cut tendon, then through the upper part of the tendon as far back as seems necessary for the effect to be produced, then through the episcleral tissue above the cornea and out through the conjunctiva beyond the vertical meridian of the globe. The other needle is similarly passed through the conjunctiva at a lower level, the lower part of the tendon and the episcleral tissue below the cornea, and out through the conjunctiva beyond the middle line of the globe. The upper needle is then slipped through the loop formed by the middle of the thread between the two points of entrance of the needles, and tied to the lower end, thus drawing the tendon and con-

junctiva into place. The stitch has the same adjustable pulley action as Prince's; there is only one knot to tie,

FIG. 57.

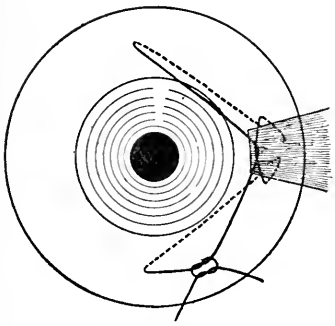

FIG. 58.

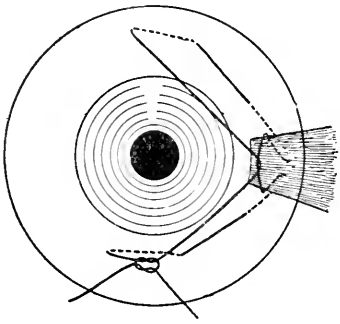

In Figs. 57 and 58 the continuous lines indicate the course of the silk *outside* the conjunctiva; the dotted lines, that of the silk *beneath* the conjunctiva.

and only one thread to cut in removal. If the thread is cut between the knot and loop, it draws out on gentle traction on the knot. Even the most timid child will allow this to be done under cocaine without discomfort, whereas the removal of a suture above the cornea, when two sutures are used, is always an unpleasant matter even with adults.

As the thread enters the conjunctiva near the cut edge and the tendon at any place that is chosen, there is the maximum effect in advancing the muscle with the minimum of puckering of the conjunctiva over the muscle operated upon.

I have been using the stitch now for over six years, and invariably employ it in all cases of advancement of muscles, or where, as in resections of the nerve, a muscle has to be detached and subsequently re-attached to the globe.

(*November 12th*, 1896.)

APPENDIX.

The following card specimens were also brought before the Society during the session.

Case of green cataract.

ERNEST CLARKE (November 12th, 1896).

Case of "Papillitis Drüsen."

E. C. FISCHER (November 12th, 1896).

Case of intra-ocular venous hæmorrhage.

R. W. DOYNE (January 28th, 1897).

Two eyes lost from spontaneous hæmorrhage after extraction of cataract.

CHARLES HIGGENS (January 28th, 1897).

Case of detachment of retina with development of connective tissue.

W. H. H. JESSOP (January 28th, 1897).

Ophthalmic specimens mounted in formol.

PRIESTLEY SMITH (May 6th, 1897).

Probable tumour of pituitary body (*postponed for completion of case*).

F. EVE and F. J. SMITH (May 6th, 1897).

Cutaneous horn on eyelid.

LINDSAY JOHNSON (June 10th, 1897).

Thrombosis of cavernous sinus (?) (*postponed for completion of case*). JOHN GRIFFITH (July 2nd, 1897).

Unusual type of corneal infiltration.

W. LANG (July 2nd, 1897).

REPORT OF COUNCIL,

Read at the Annual General Meeting of the Society, July, 1897.

The Council is able again to record a satisfactory year in the progress and work of the Society.

The number of members is 341, as compared with 330 in the previous year and 321 in 1895.

Fifteen have joined the Society during the session, and two have resigned, and one member has been removed from the list for non-payment of subscriptions for several years. The Council has also to record the loss to the Society by death of two of its members—Mr. W. Square of Plymouth, and Dr. Fred. A. A. Smith of Cheltenham. The present year shows that in spite of these losses the steady increase in the number of members is maintained.

The finances of the Society are in a sound condition. A reference to the Treasurer's balance-sheet shows a balance in favour of the Society of some seventy-seven pounds. The volume of the 'Transactions' for 1896 was larger and more profusely illustrated than usual, and while the value to members has been thereby greatly enhanced, the cost has been in excess of previous years.

The labours of the Committees of Investigation elected last session have not yet been completed, but it is hoped that reports will be issued in the succeeding session in the case of two of the Committees. The meetings of

the Society have been well attended during the past year. Much interest continues to be shown in the Clinical evenings which were started last session. There has been no indication of failure in the supply of valuable and interesting cases, and it is hoped that this new feature will become part of the permanent work of the Society.

An important discussion on retro-ocular neuritis took place on March 11th and 24th. The debate was most ably introduced by Mr. Marcus Gunn and Dr. Buzzard, and many important contributions to the subject were added by other members. These will find a place in the current volume of the 'Transactions,' and will form a permanent record of the present position of this somewhat involved subject; and it is hoped that by clearly defining the range of cases the discussion will remove much of the obscurity that has, until now, surrounded it.

LIBRARY.

There have been numerous additions to the Library since the last Report of the Council. The Society gratefully acknowledges gifts of books and pamphlets from Mr. Bickerton, Dr. G. J. Bull, Mr. Lindsay Johnson, Professor Knapp, Dr. G. E. de Schweinitz, Mr. Sydney Stephenson, Mr. Swanzy, and from the Medical Society of London.

The Library copy of the Catalogue has been re-arranged as a "Card Catalogue." This system is now adopted in nearly all important libraries, and is found greatly to facilitate reference.

ACCOUNT OF RECEIPTS AND PAYMENTS (1896–7)

OF THE

OPHTHALMOLOGICAL SOCIETY OF THE UNITED KINGDOM.

Receipts.

1896–7.	£	s.	d.	£	s.	d.
To Balance at Bankers, June 18th, 1896				100	11	3
,, Subscriptions, &c.:						
272 Subscriptions, 1894–5 (6)	£6	6	0			
,, 1895–6 (36)	37	16	0			
,, 1896–7 (229)	240	9	3			
,, 1897–8 (1)	1	1	0			
18 Entrance Fees	18	18	0			
3 Composition Fees	27	6	0			
				331	16	3
,, Contributions towards Illustrations				43	13	6
,, The Trustees of the late Sir Wm. Bowman				50	0	0
,, Sale of 'Transactions'				33	5	0
,, Dividends:						
Consols, 1895–6	£0	12	2			
Ramsgate Stock, 1896–7	5	4	7			
East India Railway B Annuities	17	18	4			
				23	15	1
Investments:						
£201 7s. 2d. Ramsgate Corporation 3 per cent. Stock.						
£20 East India Railway B Annuities.						
				£583	1	1

(Signed) GEORGE COWELL, *Treasurer.*

June 18th, 1897.

Payments.

1896–7.	£	s.	d.
By Bankers' Charges and Cheque Stamps	0	8	5
,, Insurance (2 years)	1	5	0
,, Printing 'Transactions,' &c.	193	14	9
,, Illustrations of Vol. XVI	116	12	6
,, Library	30	0	0
,, One year's Rent to March 25th	80	0	0
,, Sub-Librarian and Refreshments at Meetings	19	19	0
,, Reporting Meetings	6	9	8
,, Secretaries' Postages, &c.	3	2	3
,, Hire of 10 Microscopes	1	0	0
,, Returned Subscription to Mr. Gubb	2	2	0
,, Council Minute Book	0	19	0
,, Purchase of £47 1s. Ramsgate 3 per cent. Stock	50	0	0
,, Balance at Bankers, June 18th, 1897	77	8	6
	£583	1	1

Examined, compared with vouchers, and found correct.

(Signed) { JOHN ATTLEE, JOHN GRIFFITH, } *Auditors.*

INDEX.

PAGE

Amblyopia, central, as an early symptom in tumour at the chiasma 277
Appendix 338
Atrophy of optic nerve following injury, chiefly of the anterior part of the head 81

Batten (Rayner D.), bilateral spontaneous hæmorrhage (?) into the vitreous 58
—— two brothers with symmetrical disease of the macula commencing at the age of fourteen . . . 48
Berry (G. A.), remarks on retro-ocular neuritis . . 145
Bibliography of tuberculosis of conjunctiva . . 22
Bickerton (Thos. H.), remarks on optic atrophy following injury 105
—— remarks on sympathetic ophthalmitis . . 307
—— spontaneous dislocation of lens in its capsule into the anterior chamber 34
Bronner (Adolph), a case of coloboma of the lens . . 275
Buzzard (Thos.), contraction of fields of vision in diphtheritic neuritis 140
—— introductory remarks in discussion on retro-ocular neuritis 124
—— reply to the discussion on retro-ocular neuritis . 213

Cataract extraction in an albino 332
Choroid, disseminated white patches in, with cholesterine crystals on the surface 63
—— sarcoma of 218
Choroido-retinitis, superficial, of peculiar form and doubtful causation 62

PAGE
CLARKE (Ernest), case of green cataract . . . 338
—— specimens of Y-shaped detachment of the retina . 47
COLLINS (E. Treacher), case with clinical characters of embolism of the central artery of the retina, first in one eye and then in the other; ? hæmorrhage into the optic nerve sheath 324
—— disseminated white patches in the choroid, with cholesterine crystals on the surface . . . 63
—— microphthalmos with cystic protusion from the globe . 254
—— pathological report on microphthalmos with cyst . 267
—— and STOKER (George), ulcer of cornea, with extensive purulent infiltration; treatment with oxygen only; recovery 27
Colour-blindness, varieties and degrees of . . . 320
Congenital closure of the inferior lacrymal punctum, and absence of the canaliculus 271
—— malformation of the puncta lacrymalia . . 272
Conjunctiva, essential shrinking of, or pemphigus . . 1
—— tuberculosis of 8
Cornea, application of oxygen to suppurative conditions of . 25
—— conical, results of operations for . . . 29
—— ulcer of, with extensive purulent infiltration; treatment with oxygen only; recovery 27
CRITCHETT (G. Anderson), remarks on optic atrophy following injury to the head 105
—— and GRIFFITH (John), implantation cyst of orbit; microscopic section 242
CROSS (F. Richardson), remarks on retro-ocular neuritis, with cases 152
—— some cases of sympathetic ophthalmitis . . 300
Cyst, orbital, probably a dacryops . . . 233
Cysticercus, cases of intra-ocular 220

DODD (H. Work), a peculiar fundus oculi . . . 326
DOYNE (R. W.), case of intra-ocular venous hæmorrhage . 338
—— congenital malformation of the puncta lacrymalia . 272
—— remarks on retro-ocular neuritis . . . 196
—— results of operations for conical cornea . . 29

EDRIDGE-GREEN (F. W.), the varieties and degrees of colour-blindness 320
Embolism of lower division of central artery of retina . 55

PAGE

Enophthalmos becoming exophthalmos on stooping or on compression of the jugular vein . . . 250
Eve (F.) and Smith (F. J.), probable tumour of pituitary body 338
Eyre (J. W. H.), tuberculosis of the conjunctiva . . 8

Ferguson (H. Lindo), a stitch for the advancement or adjustment of the ocular muscles 336
Fields of vision, contraction of, in diphtheritic neuritis . 140
Filaria loa, further history of case previously reported to the Society 227
Fischer (E. C.), case of "papillitis Drüsen" . . 338
Frost (W. Adams), remarks on retro-ocular neuritis, with cases 186
—— remarks on sympathetic ophthalmitis . . . 306

Glaucoma, chronic, result of iridectomy in case of . . 328
Gowers (Sir W. R.), remarks on retro-ocular neuritis . 142
Griffith (A. Hill), remarks on retro-ocular neuritis, with cases 148
—— some cases of intra-ocular cysticercus, and one case of intra-ocular hydatid 220
Griffith (John), a case of arrest of development of the crystalline lens 273
—— a case of so-called "retinitis punctata albescens" . 51
—— thrombosis of cavernous sinus (?) . . . 338
Gunn (R. Marcus), opening remarks in discussion on retro-ocular neuritis 107
—— reply to the discussion on retro-ocular neuritis . . 208
—— result of iridectomy in case of chronic glaucoma . 328

Habershon (S. H.), remarks on case of enophthalmos . 252
Hereditary or congenital optic atrophy . . . 66
Herpes ophthalmicus, occurring shortly after extraction of cataract 334
Higgens (Charles), two eyes lost from spontaneous hæmorrhage after extraction of cataract . . . 338
Holthouse (E. H.) and Batten (R. D.), a case of superficial choroido-retinitis of peculiar form and doubtful causation 62
Hydatid, case of intra-ocular 220

PAGE
Iridectomy in chronic glaucoma 328
Iris and ciliary body, tubercular disease of . . . 31
—— sarcoma of the 30

Jessop (W. H. H.), case of detachment of retina with development of connective tissue 338
—— remarks on retro-ocular neuritis . . . 169
—— sarcoma of choroid 218
Johnson (Lindsay), cutaneous horn on eyelid . . 338
—— remarks on optic atrophy following injury . . 105
Jones (H. Macnaughton), congenital closure of the inferior lacrymal punctum and absence of the canaliculus . 271
—— remarks on retro-ocular neuritis . . . 181
Juler (Henry), case of retinal œdema with sudden failure of lower half of left visual field 53
—— case of retinal pigmentation 50
—— peculiar macular changes 60

Knaggs (R. Lawford), a case of spontaneous recovery of a retinal detachment 38

Lacrymal puncta, congenital malformation of . . 272
—— punctum, congenital closure of the inferior, and absence of the canaliculus 271
Lang (W.) and Thompson (A. H.), enophthalmos becoming exophthalmos on stooping or on compression of the jugular vein 250
—— unusual type of corneal infiltration . . . 338
Lawford (J. B.), embolism of lower division of central artery of retina 55
Lawson (Arnold), a case of orbital cyst, probably a dacryops 233
Lens, arrest of development of 273
—— case of coloboma of 275
—— spontaneous dislocation of, in its capsule into the anterior chamber 34
Little (David), remarks on retro-ocular neuritis, with cases 160
Lunn (John R.), double facial paralysis and complete deafness; ulcers of cornea due to exposure; affection of the chorda tympani 335
—— and Marshall (C. D.), foreign body in the orbit for four years; sympathetic irritation; excision of the blind eye; recovery 252

PAGE
Macroscopic specimens, mounting of . . 312
Macula, symmetrical disease of the, in two brothers . 48
Macular changes, peculiar 60
—— region, case of (?) new growth in . . . 64
Marshall (C. Devereux), on the mounting of macroscopic eye specimens 312
—— pathological report in case of central amblyopia . 296
—— sarcoma of the iris 30
Microphthalmos with cyst, case of . . . 266
—— with cystic protrusion from the globe . . 254

Nettleship (E.), central amblyopia as an early symptom in tumour at the chiasma 277
—— remarks on glaucoma in the young . . . 330
—— —— on retro-ocular neuritis . . . 197
—— —— on sympathetic ophthalmitis . . . 309
Neuritis, retro-ocular, discussion on . . . 107

Ocular muscles, stitch for the advancement or adjustment of 336
Œdema, retinal, with sudden failure of lower half of visual field 53
Ophthalmitis, sympathetic, some cases of . . . 300
Optic atrophy, cases of, following injury . . . 81
—— —— hereditary or congenital . . . 66
—— nerve-sheath, hæmorrhage into . . . 324
—— neuritis, retro-ocular, discussion on . . . 107
Orbit, foreign body in 252
—— implantation cyst of; microscopic section . . 242
—— melanotic sarcoma of 243
—— recurrent sarcoma of; extension to the cranial cavity 245
Orbital cyst, case of, probably a dacryops . . . 233
Oxygen, application of, to suppurative conditions of cornea . 25
—— treatment in ulcer of cornea; recovery . . 27

Paralysis of both facial nerves; complete deafness; ulcers of cornea; affection of the chorda tympani . . 335
Pemphigus or essential shrinking of the conjunctiva . 1
Pigmentation of retina, case of 50

PAGE
Report of the committee appointed to examine Dr. A. Hill Griffith's specimen of intra-ocular hydatid cyst . . 226
—— —— —— Dr. Risien Russell's specimens of optic nerves 180
—— —— on Mr. Snell's case of orbital tumour . . 249
—— of Council 339
Retina, detachment of; choroidal atrophy . . 45
—— Y-shaped, detachment of 47
Retinal detachment, spontaneous recovery of . . 38
—— œdema with sudden failure of lower half of left visual field 53
—— pigmentation, case of 50
"Retinitis punctata albescens" 51
Retro-ocular neuritis, discussion on . . . 107
Roberts (Edward), remarks on retro-ocular neuritis, with cases 200
Robertson (D. Argyll), note on the further history of the case of filaria loa previously reported to the Society . 227
Rolston (John R.), a case of microphthalmos with cyst . 266
Russell (Risien), remarks on retro-ocular neuritis . 178

Sandford (Arthur), case of cataract extraction in an albino . 332
—— note on the application of oxygen to suppurative conditions of the cornea 25
Sarcoma of the choroid 218
—— of the iris 30
—— of the orbit, melanotic 243
—— of the orbit; recurrence after removal, with extension to the cranial cavity 245
Silcock (A. Quarry), detachment of retina; choroidal atrophy 45
—— pemphigus or essential shrinking of the conjunctiva . 1
—— remarks on retro-ocular neuritis . . . 170
Smith (Priestley), model illustrating Tscherning's theory of the accommodation 316
—— ophthalmic specimens mounted in formol . . 338
—— remarks on a case of enophthalmos becoming exophthalmos on stooping 251
Snell (Simeon), an attack of herpes ophthalmicus occurring shortly after extraction of cataract . . . 334
—— a series of cases of optic atrophy following injury, chiefly of the anterior part of the head . . . 81
—— hereditary or congenital optic atrophy and allied cases . 66
—— remarks on sympathetic ophthalmitis . . 309

PAGE

SNELL (Simeon), sarcoma of orbit; recurrence after removal, with extension to the cranial cavity . . . 245
SPICER (W. T. Holmes), remarks on retro-ocular neuritis, with cases 173
—— and MARSHALL (C. D.), tubercular disease of iris and ciliary body 31

Tscherning's theory of the accommodation, model of . 316
Tubercular disease of iris and ciliary body . . 31
Tuberculosis of the conjunctiva 8

Vitreous, bilateral spontaneous hæmorrhage (?) into . 58

WALKER (C. H.), a case of (?) new growth in the macular region 64
WILLIAMS (Richard), notes of a case of melanotic sarcoma of the orbit 243

PRINTED BY ADLARD AND SON,
BARTHOLOMEW CLOSE, E.C., AND 20, HANOVER SQUARE, W.

RE
1
067
v.17
cop. 2

Ophthalmological Society of
the United Kingdom
Transactions

Biological
& Medical
Serials

PLEASE DO NOT REMOVE
CARDS OR SLIPS FROM THIS POCKET

UNIVERSITY OF TORONTO LIBRARY